Control Number
DVEML0376

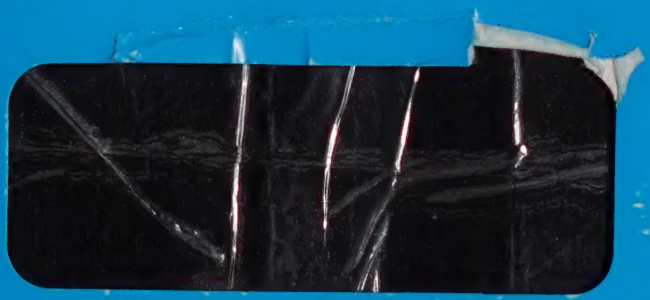

GOULD
Electronics

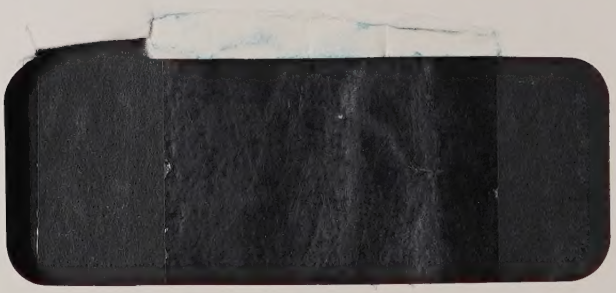

DVEML 0376

GOULD
Electronics

MANUAL PART NO.
2107-804XXX-XX

# GOULD 2400S RECORDERS
# INK WRITING MODELS
# OPERATORS AND SERVICE MANUAL

The information contained herein is the exclusive property of Gould Inc., except as otherwise indicated and shall not be reproduced in whole or in part without explicit written authorization from the company. The distribution of this material outside the company may occur only as authorized by the company in writing.

All information contained in this manual is the latest product information available at the time of printing. The right is reserved to make changes at any time without notice.

PRINTED NOVEMBER, 1983
COPYRIGHT 1982

**Gould Inc., Recording Systems Division**
3631 Perkins Avenue, Cleveland, Ohio 44114

3RD PRINTING
PRINTED IN U.S.A.

The following information is intended to alert the user to possible dangers and important information contained in this manual. The "WARNINGS" and "CAUTIONS" do not eliminate the dangers that they signal. Close attention to the information supplied plus "common sense" operation are the major accident prevention measures.

| | |
|---|---|
| WARNING: | **Failure to follow this warning may result in bodily injury.** |

| | |
|---|---|
| CAUTION: | **Failure to follow this caution may result in possible damage to the product or equipment.** |

Digitized by the Internet Archive
in 2026

https://archive.org/details/manualsplus_11763

GOULD
Electronics

# WARRANTY

## CURRENT EQUIPMENT:

The Gould Recording Systems Division's products as shown in the Current Equipment Catalog are warranted for a period of one year from date of shipment to original purchaser. They are warranted to conform to the applicable published specifications in effect at the time of shipment, and to be free from any defects in material or manufacture when used with recommended Gould associated equipment and Gould chart paper. LIABILITY OF THE GOULD RECORDING SYSTEMS DIVISION UNDER SUCH WARRANTY IS LIMITED TO SERVICING OR REPLACING DEFECTIVE PARTS EXCEPT PENS, STYLI, FUSES AND BATTERIES AND DOES NOT INCLUDE CALIBRATION AND MINOR MAINTENANCE AS OUTLINED IN GOULD OPERATING MANUALS. (Exceptions: The thermal pen in the 110 Strip Chart Recorder is guaranteed for life. The magnetic head assemblies in the Tape Recorder are warranted for 1000 hours of use or (1) one year from date of first shipment whichever occurs first.) IN NO EVENT SHALL THE GOULD RECORDING SYSTEMS DIVISION BE LIABLE UNDER ANY CIRCUMSTANCES, FOR ANY LOSS OF PROFITS OR OTHER CONTINGENT, CONSEQUENTIAL OR SPECIAL DAMAGES. Units are to be returned transportation prepaid by the buyer. The Gould Recording Systems Division will have the right of final determination of the cause and existence of a defect under this warranty. This warranty shall not apply to any products which have been subjected to misuse, improper installation, repair, alteration, neglect, accident, inundation, fire or operation outside their published maximum ratings. THE FOREGOING WARRANTY IS EXCLUSIVE AND EXPRESSLY IN LIEU OF ALL OTHER WARRANTIES WHETHER EXPRESSED OR IMPLIED, INCLUDING ANY IMPLIED WARRANTIES OF MERCHANTABILITY OR FITNESS AND OF ANY OTHER OBLIGATION AND SHALL CONSTITUTE THE SOLE REMEDY OF THE BUYER AND SOLE LIABILITY OF THE SELLER.

Gould offers an Extended Warranty Contract for all Recording Systems Division's products manufactured in the Cleveland Perkins' facility, along with calibration traceable to NBS. Please contact the Service Center listed below for details before your warranty expires.

**REPLACEMENT PARTS: Same as above -- except ninety (90) days from date of shipment.**

If a defect occurs:

1. Notify your nearest RSD Service Center (see below), giving full details of the difficulty, and include the model number, type number, and serial number. On receipt of this information, service data or shipping authorization and instructions will be forwarded to you.

2. On receipt of the shipping authorization, forward the instrument prepaid to location indicated on shipping authorization.

Compliance with the above procedure will assure the earliest repair and return of your equipment.

**REFER TO REAR COVER FOR SERVICE CENTER LOCATIONS.**

**Gould instruments are individually tested and calibrated before shipment to assure dependability and verify their accuracy. To this procedure must be added an unseen ingredient of prime importance to you: The Gould concept of continuing service. Gould responsibility for each instrument sold covers far more than its delivery. Of equal concern is the equipment's suitability for its intended purpose, its correct installation, instruction of operating personnel -- plus future servicing and maintenance. The Gould Field Service Department offers customers any or all of these services:**

## Field Service

- o Installation
- o Field maintenance
- o NBS Certification

## Training

- o Instruction of operators
- o On-site training seminars
- o Formal Training courses

## Service Contracts

- o Fixed Fee
- o Time and Material
- o Extended Warranty

**Our Seal of Pride** Gould Inc., Recording Systems Division, and its predecessor organizations tracing back to Charles F. Brush, have been preeminent in instrumentation development since the 1920's. Among Gould's many achievements is a series of the world's best performing, most versatile, and reliable direct writing recording systems.

Today, Gould recorders and signal conditioners are the overwhelming choice for recording analog signals in the most critical industrial, scientific, and biophysical measurement applications. Whether recording the faintest life signals of a patient in a hospital operating room or the most critical variables in the lab or on the production line, you can depend on the accuracy, faithfulness, clarity, and permanence of the traces made by a Gould recorder.

Innovative design, coupled with highest quality, are hallmarks of all Gould products.

**The Field Service Engineer** Gould field service engineers provide on-the-spot assistance whenever and wherever it is required. While every field service engineer is the product of intensive and thorough factory training, you will find that his greatest strength evolves from field experience and his knowledge of your objectives. He is aware of your problems, is willing and able to assist you in their solution, and is backed by the nation's most experienced organization in recording instrumentation.

Our field service engineers and technicians are daily engaged in the installation, testing, maintenance, repair and inspection of Gould recording systems all over the country. They can provide you with any information about our instruments you may require; if not, they will find the answer to your problem.

**Overhaul and Repair** Because we service only our own products, our customers can feel confident of prompt, effective results when they turn to Gould Factory Service Centers.

The repair service these centers provide is of particular appeal to those companies that do not operate an instruments repair facility of their own. By designating the nearest Gould Service Center as its maintenance depot, a Gould-equipped company is assured the best chance for continuity of recording instrumentation.

Many companies with their own repair facilities find it more convenient and more truly economical to have their Gould equipment repaired by service contract with the closest Service Center. In addition to enjoying fast turn-around, these companies are spared the expense of carrying an inventory of recorder parts, accessories, and supplies.

**Calibration and Certification** A small, quiet room in the Standards and Calibration Section at the Gould plant in Cleveland contains precision reference standards just one step removed from the prime reference measurement standards of the United States – at the National Bureau of Standards in Washington. Included in this room which is temperature-controlled within one degree and has a constant relative humidity of 40%, are standards for voltage, frequency (derived from the atomic vibration of caesium), resistance, capacitance -- in fact all basic parameters of electrical measurement. The room is maintained under stabilized conditions 365 days a year.

The calibration practice of all Gould Service Centers is directly traceable to the National Bureau of Standards. We can supply complete calibration for any Gould equipment, and we can also certify to manufacturer's specifications followed by a letter of certification when required.

**Training** The Gould field service engineer will hold short training courses either on the job or at his facility. On-the-job training is usually a brief, informal session with the people who will actually be operating the Gould equipment.

Formal classroom training is more complete: detailed information, a thorough review of underlying theory, training devices, demonstration of problem solving and examination of students to determine their understanding and proficiency is accomplished at our Cleveland plant.

**Contracts** Customer companies requiring temporary or permanent service are afforded contract arrangements by which agreed-upon maintenance, repair, upgrading and calibration services are performed on a routine basis. Service contracts are now in effect with a number of customers, affording substantial savings in time and money.

Owing to the various requirements of each customer, we do not reproduce here a standard, boilerplate agreement -- which might contain too much or too little. Instead, we tailor each contract to a particular customer's needs. This practice has singlehandedly produced substantial savings in time and money for others; and it can do the same for you.

An extended warranty is available at the point of sale allowing a regulated budget for the first two years of ownership. You may take advantage of this warranty within the first year of ownership at a percentage of the current listed price.

# SERVICE CENTERS

ATLANTA
RECORDING SYSTEMS DIVISION
1710 Wilwat Drive
Suite D
Norcross, Georgia 30093
Phone (404) 441-5556

BOSTON
RECORDING SYSTEMS DIVISION
129 Middlesex Turnpike
Burlington, Massachusetts 01803
Phone: (617) 272-0750

BAY AREA (CA)
RECORDING SYSTEMS DIVISION
25936 Eden Landing Road
Hayward, California 94545
Phone: (415) 782-0852

CHICAGO
RECORDING SYSTEMS DIVISION
1550 East Higgins Road
Suite 122
Elk Grove Village, Illinois 60007
Phone: (312) 640-4380

CLEVELAND
RECORDING SYSTEMS DIVISION
3631 Perkins Avenue
Cleveland, Ohio 44114
Phone: (216) 361-3315

DAYTON
RECORDING SYSTEMS DIVISION
432 Windsor Park Drive
Centerville, Ohio 45459
Phone: (513) 433-9586

DENVER
RECORDING SYSTEMS DIVISION
1500 West Hampden Avenue
Unit 1C
Englewood, Colorado 80110
Phone: (303) 781-4473

DETROIT
RECORDING SYSTEMS DIVISION
32307 Mally Road
Madison Hts., Michigan 48071
Phone: (313) 588-4024

HOUSTON
RECORDING SYSTEMS DIVISION
10500 Northwest Freeway
Houston, Texas 77092
Phone: (713) 680-1121

LANHAM, MD
RECORDING SYSTEMS DIVISION
6301 Ivy Lane Suite 106
Greenbelt, Maryland 20770
Phone: (301) 345-0050

LOS ANGELES
RECORDING SYSTEMS DIVISION
16310 Arthur Street
Cerritos, California 90701
Phone: (213) 404-1919

ORLANDO
RECORDING SYSTEMS DIVISION
772 Northlake Avenue
Altamonte Springs, Florida 32701
Phone (305) 830-0695

PHILADELPHIA
RECORDING SYSTEMS DIVISION
1 Great Valley Parkway East Suite 6
Great Valley Corporate Center
Malvern, Pennsylvania 19355
Phone: (215) 647-2214

PITTSBURGH
RECORDING SYSTEMS DIVISION
Campbells Run Road
Parkway West
Pittsburgh, Pennsylvania 15205
Phone: (412) 923-2970

ROCHESTER
RECORDING SYSTEMS DIVISION
200 Buell Road
Rochester, New York 14624
Phone: (716) 235-4980

SADDLE BROOK
RECORDING SYSTEMS DIVISION
74 Kenney Place
Saddle Brook, New Jersey 07662
Phone: (201) 845-0220

TORONTO
ALLAN CRAWFORD ASSOC., LTD.
6503 Northam Drive
Mississauga, Ontario, Canada
Phone: 678-1500

EUROPE

GOULD INSTRUMENTS S.A.F.
57 rue St. Sauveur 91160
Ballainvilliers, France
Phone: 011-33-6-934-1067

GOULD BRYAN INSTRUMENTS LTD.
Willow Lane
Mitcham, Surrey CR4-4UL, England
Phone: 01-640-3490

GOULD INSTRUMENTS GMBH
Dieselstrasse 5-7
D-6453 Seligenstadt,
West Germany
Phone: 06182-3107

# TABLE OF CONTENTS


| SECTION | | TITLE | PAGE |
|---|---|---|---|
| I | | GENERAL INFORMATION | |
| | 1.1 | SCOPE OF MANUAL | 1.1 |
| | 1.2 | DESCRIPTION | 1.1 |
| | 1.3 | MODEL NUMBERING SYSTEM | 1.1 |
| | 1.4 | SPECIFICATIONS | 1.2 |
| | 1.4.1 | General | 1.2 |
| | 1.4.2 | Electrical | 1.2 |
| | 1.4.3 | Physical | 1.4 |
| | 1.5 | SUPPLIES AND ACCESSORIES | 1.4 |
| | 1.5.1 | Supplies | 1.4 |
| | 1.5.2 | Accessories | 1.5 |
| II | | INSTALLATION | |
| | 2.1 | GENERAL | 2.1 |
| | 2.2 | SERVICE UPON RECEIPT | 2.1 |
| | 2.3 | LINE VOLTAGE REQUIREMENTS | 2.1 |
| | 2.4 | ANALOG SIGNAL CONNECTIONS | 2.1 |
| | 2.4.1 | Without Preamplifiers | 2.1 |
| | 2.4.2 | With Preamplifiers | 2.2 |
| | 2.5 | EVENT MARKER INPUTS | 2.2 |
| | 2.5.1 | Standard Event Markers | 2.2 |
| | 2.5.2 | Optional Event Marker | 2.2 |
| | 2.6 | REMOTE CHART DRIVE | 2.2 |
| | 2.7 | CHART TAKE-UP INSTALLATION | 2.3 |
| | 2.8 | RACK MOUNTING KITS | 2.3 |
| | 2.9 | A.C. JUMPER BOARD | 2.4 |
| | 2.10 | THERMAL ANNOTATION OPTION | 2.4 |
| III | | OPERATION | |
| | 3.1 | GENERAL | 3.1 |
| | 3.2 | FRONT PANEL CONTROLS & INDICATORS | 3.1 |
| | 3.3 | REAR PANEL | 3.4 |
| | 3.4 | TIMER SETTING | 3.6 |
| | 3.5 | RIGHT EVENT TIMER ACTUATION | 3.6 |
| | 3.6 | SET-UP AND OPERATION | 3.6 |
| | 3.7 | REMOTE CONTROL OPERATION | 3.8 |
| | 3.8 | ELECTRICAL APPLICATIONS | 3.5 |
| | 3.9 | MASTER/SLAVE OPERATION | 3.8 |
| IV | | THEORY OF OPERATION | |
| | 4.1 | GENERAL | 4.1 |
| | 4.2 | MAINFRAME | 4.1 |
| | 4.3 | ANALOG RECORDING CHANNELS | 4.3 |
| | 4.4 | STEPPER CHART DRIVE | 4.3 |
| | 4.5 | SYSTEM DESCRIPTION | 4.5 |
| | 4.6 | BLOCK DIAGRAM | 4.5 |
| | 4.7 | PROCESSOR BOARD | 4.5 |
| | 4.7.1 | Step Clock System | 4.7 |
| | 4.7.2 | Step Clock Period Counter | 4.7 |

| | | |
|---|---|---|
| 4.7.3 | Speed Selector | 4.7 |
| 4.7.4 | Motor Drive Outputs | 4.8 |
| 4.7.5 | Chart Motion Detector | 4.8 |
| 4.7.6 | Power On/Failsafe Reset | 4.8 |
| 4.7.7 | Switching Amplifier | 4.8 |
| 4.7.8 | Sawtooth Generator | 4.9 |
| 4.7.9 | Pulse Width Modulator and Error Amp | 4.9 |
| 4.8 | POWER SECTION | 4.9 |
| 4.8.1 | Control/Timer Board | 4.9 |
| 4.8.2 | Power Supply Board | 4.10 |
| 4.8.3 | Optical Sensor Board | 4.10 |
| 4.8.4 | Speed Selector Board | 4.10 |
| 4.8.5 | Thermal Writing | 4.11 |
| 4.8.6 | Software | 4.11 |
| 4.8.7 | Speed Select/Decode | 4.11 |
| 4.8.8 | Speed Loops | 4.11 |
| 4.8.9 | Frequency Adjust Routine | 4.12 |

V MAINTENANCE

| | | |
|---|---|---|
| 5.1 | INTRODUCTION | 5.1 |
| 5.2 | OPERATIVE MAINTENANCE | 5.1 |
| 5.2.1 | Chart Paper Replacement | 5.1 |
| 5.2.2 | Ink Cartridge Replacement | 5.1 |
| 5.2.3 | Pen Replacement | 5.4 |
| 5.2.4 | Fuse Replacement | 5.5 |
| 5.3 | PREVENTIVE MAINTENANCE | 5.7 |
| 5.3.1 | Recorder Cleaning | 5.7 |
| 5.3.2 | Pen Cleaning | 5.7 |
| 5.3.3 | Pen Pressure Measurement | 5.8 |
| 5.3.4 | Pen Lapping | 5.9 |
| 5.3.5 | Manifold Bleeding Procedure | 5.10 |
| 5.3.6 | Case Removal | 5.10 |
| 5.4 | CALIBRATION | 5.11 |
| 5.4.1 | General | 5.11 |
| 5.4.2 | Test Equipment Required | 5.11 |
| 5.4.3 | Preliminary Set-Up | 5.11 |
| 5.4.4 | Calibration Procedure | 5.11 |
| 5.4.5 | Span Adjustment | 5.11 |
| 5.4.6 | Limit Adjustment | 5.11 |
| 5.4.7 | Damping Adjustment | 5.11 |
| 5.4.8 | Frequency Compensation Adjustment | 5.12 |
| 5.4.9 | Main Frame Tests | 5.12 |
| 5.4.10 | Remote Control | 5.12 |
| 5.4.11 | Standard Event Markers | 5.13 |
| 5.4.12 | Optional Event Markers | 5.13 |
| 5.4.13 | 2400S Chart Drive Calibration | 5.14 |
| 5.5 | TROUBLESHOOTING | 5.16 |
| 5.5.1 | General | 5.16 |
| 5.5.2 | Electrical Power Malfunctions | 5.16 |
| 5.5.3 | Chart Drive Malfunctions | 5.16 |

V MAINTENANCE - Continued


| | | |
|---|---|---|
| 5.5.4 | Writing System Malfunctions | 5.17 |
| 5.5.5 | Signal Malfunctions | 5.18 |
| 5.5.6 | Processor Board Troubleshooting | 5.19 |
| 5.5.7 | Preliminary | 5.19 |
| 5.5.8 | Switching Amp Board Troubleshooting | 5.20 |
| 5.6 | SUBASSEMBLY REPLACEMENT | 5.24 |
| 5.6.1 | Ink Cartridge Replacement | 5.24 |
| 5.6.2 | Solenoid Valve Assembly Replacement | 5.25 |
| 5.6.3 | Manifold Assembly Replacement | 5.25 |
| 5.6.4 | Table Assembly Replacement | 5.26 |
| 5.6.5 | Stepper Motor Replacement | 5.26 |
| 5.6.6 | Chart Drive or Control Transformer Replacement | 5.26 |
| 5.6.7 | Power Transformer Replacement T101 thru T104 | 5.27 |
| 5.6.8 | Penmotor Replacement | 5.27 |
| 5.6.9 | Pen Motor Drive Band Replacement | 5.27 |

| | | |
|---|---|---|
| VI | PARTS IDENTIFICATION | |
| 6.1 | GENERAL | 6.1 |
| 6.2 | PARTS USED ON OTHER MODELS | 6.1 |
| APPENDIX | SCHEMATIC DRAWINGS | A1 |


## LIST OF ILLUSTRATIONS


| FIGURE | TITLE | PAGE |
|---|---|---|
| 1-1 | GOULD 2400S PORTABLE INK RECORDER | 1.1 |
| 1-2 | OUTLINE DIMENSIONS - 2400S SERIES | 1.7 |
| 1-3 | OUTLINE DIMENSIONS - 2400S SERIES WITH 4 PREAMPS | 1.8 |
| 1-4 | OUTLINE DIMENSIONS - 2400S RECORDER - PORTABLE W/O CASE | 1.9 |
| 1-5 | OUTLINE DIMENSIONS - 2400S RACK MOUNT | 1.10 |
| 2-1 | SIGNAL INPUT CONNECTIONS | 2.1 |
| 2-2 | REAR PANEL TERMINAL CONNECTIONS | 2.2 |
| 2-3 | CHART TAKE-UP INSTALLATION | 2.33 |
| 2-4 | A.C. JUMPER BOARD | 2.4 |
| 3-1 | FRONT PANEL CONTRLS & INDICATORS | 3.1 |
| 3-2 | REAR PANEL | 3.3 |
| 3-3 | EXTERNAL PULSE REQUIREMENTS | 3.5 |
| 4-1 | BLOCK DIAGRAM (OVERALL SYSTEM) | |
| 4-2 | ANALOG CHANNEL BLOCK DIAGRAM | 4.4 |
| 4-3 | FULL STEPPING | 4.5 |
| 4-4 | MICROSTEPPING | 4.5A |
| 4-5 | NORMALIZED PHASE CURRENT | 4.5A |
| 4-6 | BLOCK DIAGRAM (OVERALL SYSTEM) | 4.5A |
| 4-7 | SPEED FLOW CHART | 4.13 |
| 4-8 | DECODE ROUTINE FLOW CHART | 4.14 |
| 4-9 | GENERAL SPEED LOOP FLOW CHART | 4.15 |
| 4-10 | FREQUENCY ADJUST ROUTINE FLOW CHART | 4.16 |

LIST OF ILLUSTRATIONS - Continued


5-1 PAPER ROLL REMOVAL ..... 5.1
5-2 CHANGING CHART PAPER ..... 5.1
5-3 PAPER THREADING DIAGRAM ..... 5.2
5-4 RECORDER TOP VIEW ..... 5.3
5-5 INK CARTRIDGE ASSEMBLY ..... 5.4
5-6 PEN REPLACEMENT ..... 5.5
5-7 RECORDER REAR VIEW ..... 5.6
5-8 HYPODERMIC NEEDLE MODIFICATION ..... 5.7
5-9 PEN PRESSURE MEASUREMENT ..... 5.8
5-10 PEN PRESSURE ADJUSTMENT ..... 5.8
5-11 PEN LAPPING ..... 5.9
5-12 BLEEDING INKING SYSTEM ..... 5.10
5-13 CALIBRATION CONTROLS ..... 5.12
5-14 PROCESSOR BOARD CALIBRATION ..... 5.14
5-15 S401 POSITIONS ..... 5.15
5-16 SINE OUTPUT SIGNAL ..... 5.19
5-17 COSINE OUTPUT SIGNAL ..... 5.19
5-18 SINE/COSINE GATING SIGNAL ..... 5.20
5-19 ERROR AMPLIFIER ..... 5.21
5-20 STEPPER MOTOR COILS ..... 5.22
5-21 SWITCHING AMP STAR DIAGRAM ..... 5.23
5-22 INK CARTRIDGE REPLACEMENT ..... 5.24
5-23 INK TURN OFF AND TURN ON ..... 5.24
5-24 INK CARTRIDGE ASSEMBLY ..... 5.24
5-25 PENMOTOR DRIVE BAND REPLACEMENT ..... 5.28

6-1 2400S SERIES RECORDER, PORTABLE ..... 6.3
6-2 2400S SERIES RECORDER, RACK MOUNTED ..... 6.5
6-3 2400S RECORDER ASSY ..... 6.12
6-4 2400S RECORDER ASSY ..... 6.13
6-5 SPEED SELECT BOARD ASSY ..... 6.17
6-6 PLATE ASSY, L.H. ..... 6.19
6-7 CONTROL TIMER BOARD ASSY ..... 6.21
6-8 DRIVE AMPLIFIER BOARD ASSEMBLY ..... 6.25
6-9 INTERCHANNEL EVENT MARKER ..... 6.27
6-10 BAR ASSEMBLY, PENMOTOR ..... 6.29
6-11 BRAKE ASSY ..... 6.31
6-12 R.H. PLATE ASSEMBLY ..... 6.34
6-13 SENSOR ASSEMBLY ..... 6.35
6-14 TABLE ASSEMBLY, WRITING ..... 6.37
6-15 CASE ASSEMBLY ..... 6.39
6-16 CAGE ASSEMBLY ..... 6.41
6-17 CHART TAKEUP ASSEMBLY ..... 6.43
6-18 DAMPER ASSY ..... 6.45
6-19 PROCESSOR BOARD ASSY ..... 6.49
6-20 SWITCHING AMP BOARD ASSY ..... 6.53
6-21 POWER SUPPLY BOARD ASSY ..... 6.55
6-22 RECORDER RACK MOUNT INSTALLATION ..... 6.57
6-23 RACK MOUNT INSTALLATION PREAMP CAGE ..... 6.59
6-24 RACK MOUNT INSTALLATION - 4 CHANNEL CAGE ..... 6.61

# LIST OF TABLES


| TABLE | TITLE | PAGE |
|---|---|---|
| 1-1 | 2400S RECORDER MODEL NUMBERING SYSTEM | 1.6 |
| 3-1 | TIMER REPETITION SWITCH SETTINGS | 3.4 |
| 3-2 | SIGNAL INPUTS FOR REMOTE OPERATION | 3.6 |
| 3-3 | REMOTE CONTROL PIN SPEED ASSIGNMENTS | 3.6 |
| 4-1 | FUSE VS CIRCUIT PROTECTED | 4.3 |
| 4-2 | CHART DRIVE SPEED CODES | 4.9 |
| 4-3 | TIMER SWITCH SETTINGS | 4.10 |
| 4-4 | REMOTE SPEED CODES | 4.10 |
| 5-1 | FUSE TABLE | 5.6 |
| 6-1 | FUSE TABLE | 6.11 |

# SECTION I

# GENERAL INFORMATION

## 1.1 SCOPE OF MANUAL

This manual is provided for operators of Gould 2400S Direct Writing Ink Recorders. The manual contains Recorder Description, Specifications, and a Supplies and Accessories list. In addition this manual also contains detail service and repair information including Theory of Operation, Installation Procedures, Operator's instructions, Routine Maintenance, and Illustrated Parts Breakdown (IPB). Instructions for preamplifiers which may be used with these recorders are contained in their own applicable manuals.

**WARNING: IN PATIENT CARE APPLICATION, ISOLATION TRANSFORMER (GOULD P/N 882895-3 (115V), -4 (230V) OR EQUAL) MUST BE CONNECTED BETWEEN POWER SOURCE AND RECORDER.**

## 1.2 DESCRIPTION

The Gould 2400S Direct Writing Recorder (Figure 1-1) features a high performance steppermotor and a microprocessor (digital) control. The recorder is self-contained in a 250mm mainframe chassis and contains either two 100mm channels or one 100mm and two 50mm channels or four 50mm channels. The recorder may be housed in a portable case (Figure 1-1) or rack-mounted in a standard RETMA rack. (See Model Numbering Table for specific configuration.)

Incremental chart drive is a standard feature of the recorder. Its steppermotor and microprocessor (digital) control allows for quiet operation and chart speeds from 0.05mm/sec. to 200mm/sec. in 12 steps via front-panel pushbuttons or remote TTL inputs. The chart speed can also be varied continuously between steps with a front panel variable speed control or remote TTL pulse input.

The Gould 2400S Recorder employs a pressurized fluid writing system. The system uses fast drying ink which is applied to specially coated chart paper. The ink is contained in disposable plastic cartridges which can be replaced in minutes. Standard on all recorders are 2 event markers with pens and 1 (or 2) penmotor(s) and pen(s).

## 1.3 MODEL NUMBERING SYSTEM

The model number of the 2400S Direct Writing Recorder designates the number of recording channels, type of mounting, preamp cage as required, and operating voltages. Table 1-1 on page 1.5 describes the various models. Appropriate outline dimensional drawings follow the model numbering table.

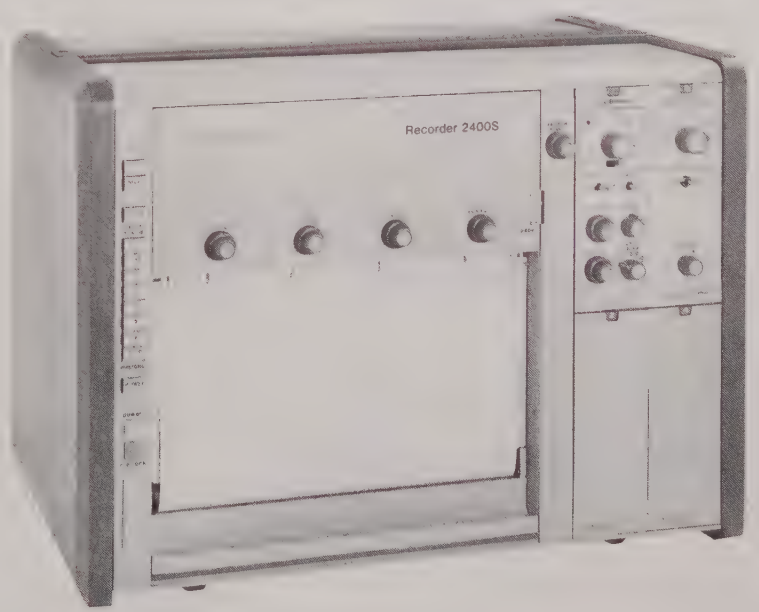


FIGURE 1-1 GOULD 2400S PORTABLE INK RECORDER

## 1.4 SPECIFICATIONS

### 1.4.1 General

Number of Analog Channels . . . . . 2/100mm, 1/100mm and 2/50mm or 4/50mm.

Number of Event Marker Channels . . . . . Two. Left and right margin standard. (additional interchannel event markers optional)

Channel Span

4-Channel Recorder. . . . . 50mm.
3-Channel Recorder. . . . . 100mm and 50mm.
2-Channel Recorder. . . . . 100mm.

Trace Presentation. . . . . Rectilinear.

Trace Width. . . . . 0.01 nominal.

Marking Method . . . . . Pressurized fluid (ink).

Marking Fluid Capacity. . . . . One or two-ounce replaceable, throw away cartridge.

Chart Speeds. . . . . 5, 10, 25, 50, 100 and 200mm/sec. and divide-by-100. Selectable via front-panel pushbuttons or remotely via TTL or contact closure. Continuously variable via front-panel control or external pulse input.

Chart Speed Accuracy. . . . . ±0.25% @ 25°C ±10°C.

Chart Length. . . . . 275ft (84 mtrs) Kromecote. 400ft (122 mtrs).

Chart Width. . . . . 250mm and 380mm.

Divisions per Channel . . . . . 50 Divisions on 50mm channels. 100 Divisions on 100mm channels.

Time Lines . . . . . One-mm by one-mm accentuated every 5-mm and 100mm.

Chart Travel Direction. . . . . Top to Bottom.

Paper Discharge. . . . . Front.

Chart Speed Accuracy. . . . . ±0.25mm (independent of frequency).

Operating Temperature Range. . . . . 0°C to +50° (+32°F to +122°F).

Storage Temperature Range . . . . . -40°C to +70°C (-40°F to +158°F).

Humidity. . . . . 95% @ 32°C (+90°F); Non-Condensing.

### 1.4.2 Electrical

Input Circuit . . . . . Single ended, floating. (Isolated from ground up to 500Vdc.)

Input Impedance. . . . . 100Kohm ±1%. (Recorder without preamps.)

Input Signal. . . . . 5 volt span for 100 or 50mm channels.

Input Power . . . . . 100V, 115V, 200V and 230V ±10%, 50 to 400Hz.

Power Consumption . . . . . (60W + 50W per channel)

Frequency Response . . . . . 100 div. @ 100 millimeter amplitude: dc to 30Hz ±1div.
50 div @ 50 millimeter amplitude: dc to 50Hz ±1div.
40 div @ 40 millimeter amplitude: dc to 55Hz ±1div.
10 div @ 10 millimeter amplitude: dc to 125Hz ±1div., less than 3dB down @ 140 Hz.

Rise Time (10% to 90% full scale with less than 1% overshoot) . . . . . At 100mm amplitude: less than 8 msec.
At 50mm amplitude: less than 5 msec.
At 40mm amplitude: less than 4msec.

Noise. . . . . 0.1mm pk-to-pk, R = 1 Kohm.

Non-Linearity . . . . . ±0.35% of full scale.

Pen Position Control . . . . . 270° Rotation single turn potentiometer one per channel.

Maximum Allowable Signal Input Voltage to Avoid Damage . . . . . ±50Vdc or peak ac (recorder without preamplifiers).

Maximum Safe Common Mode Voltage . . . . . 500Vdc or peak ac.

Common Mode Rejection Ratio . . . . . 60dB @ 60Hz (R = 1 Kohm, recorder w/o preamps).
80dB @ dc (R = 1 Kohm, recorder w/o preamps).

Signal Limiters . . . . . Built-in adjustable and mechanical. (Limiters prevent pen damage from off-scale overloads).

Zero-Line Instability (Drift) . . . . . ±0.1% of full scale for 24 hrs.
±0.025% of full scale per °C.
±0.1% of full scale for ±10% line voltage change.

Gain Instability . . . . . ±0.1% of reading for 24 hrs.
±0.05% of reading per °C.
±0.5% of reading for ±10% line voltage change.

Remote Control Operation . . . . . All speeds selectable thru rear panel connector J-102 and are TTL compatible.

Internal Timer (Standard on all recorders) . . . . . Produces 40-ms duration pulses at internally programmable repetition rates of: 0.1, 1, 10 and 100 sec. and 0.01, 0.1, 1 and 10 minutes.

External Pulse Speed Control . . . . . Chart speed is continuously variable via TTL pulse train. Frequencies of 0 to 20KHz corresponds to chart speeds of 0 to 250mm/sec in a linear relationship.

External Pulse Input . . . . . 3 TTL Loads, Min. 10$\mu$sec. Negative pulse width, 0-20KHz. Stepping occurs on negative transition 79.8 pulses/mm.

Variable Speed Control . . . . . Continuously variable over a range of 2.5:1 down to next lower speed.

### 1.4.3 Physical

Principle Dimensions. . . . . Refer to outline dimensional drawings following model numbering table.

Weight . . . . . Recorder 35.5 lb (16 Kg) Portable Case 14 lb (6.3 Kg). 6.5 lb (2.9 Kb) per channel plus 1.516 (0.7 Kg) for 4 preamp cage.

Finish . . . . . Light and Dark Parchment.

## 1.5 SUPPLIES AND ACCESSORIES

### 1.5.1 Supplies

Chart Paper (not perforated)

Two 100-mm channels . . . . . 11-2923-34
One 100-mm and two 50-mm channels . . . . . 11-2933-30
Four 50-mm channels . . . . . 11-2943-30
Four 50-mm channels reproducible . . . . . 11-2943-41

Chart Paper (semi-perforated with optical sensing marks and page numbers)

Two 100-mm channels . . . . . 11-2923-301
One 100-mm and two 50-mm channels . . . . . 11-2933-300
Four 50-mm channels . . . . . 11-2943-300

Analog Pen
(includes ink tube, lapping paper, and pen pressure adjustment wrench.) . . . . . 11-2823-42

Analog Pen, Long Life
(includes ink tube, lapping paper, and pen pressure adjustment wrench.) . . . . . 11-2823-422608

Event Marker Pen . . . . . 267884-5

Ink Tube (Event Marker Pen) . . . . . 667447-1

Ink Cartridge (1 oz. Blue Ink) . . . . . 11-2730-01

Gram Gage . . . . . 240601-910

Plug, Signal Input, P-201 (shipped loose with recorder) . . . . . 114816-15
Plug, Monitor, P-202 (shipped loose with recorder). . . . . 289046
Connector, P-102 (shipped loose with recorder) . . . . . 245537
Shield for P-102 . . . . . 284428-15

## 1.5.2 Accessories

Starter Kits

Starter kits include 12 rolls of high contrast chart paper, gram gage, one analog pen, lapping paper and pen pressure adjustment wrench. Below are starter kit model numbers.

Two 100-mm channel kit (paper not perforated) ..... 11-6250-05
Two 100-mm channel kit (semi-perforated paper) ..... 11-6250-18
One 100-mm and two 50-mm channel kit (paper not perforated) ..... 11-6250-03
One 100-mm and two 50-mm channel kit (semi-perforated paper) ..... 11-6250-16
Four 50-mm channel kit (paper not perforated) ..... 11-6250-04
Four 50-mm channel kit (semi-perforated paper) ..... 11-6250-17

Interchannel Event Marker (includes 3-channel harness; includes pens when ordered with recorder) ..... 11-2123-35

Additional Event Markers without harness; includes pen when order with recorder ..... 887181

Fuse Kits

| | 42xx | 43xx | 44xx |
|---|---|---|---|
| 115V, 50-400Hz | 695123-00 | 695124-00 | 695125-00 |
| 100V, 50-400Hz | 695123-01 | 695124-01 | 695125-01 |
| 230V, 50-400Hz | 695123-06 | 695124-06 | 695125-06 |
| 200V, 50-400Hz | 695123-07 | 695124-07 | 695125-07 |

Drive Amplifier Extender Card ..... 887526

Pen Pressure Adjustment-Wrench ..... 1-120922-18

Band, Penmotor ..... 684999

Ink Tube Replacement Tool ..... 267528

Rack Mounting Kits (For Conversion of Portable Units)

Kit to convert portable Gould 2400S Recorder only for rack mounting ..... 11-1202-11

Kit to convert portable Gould 2400S Recorder with 2-amplifier cage for rack mounting ..... 11-1202-12

Kit to convert portable Gould 2400S Recorder only for 4-amplifier cage for rack mounting ..... 11-1202-13

Shipping Frame (with equipment installed) ..... 467037

Mobile Cart ..... 11-6405-01

Chart Takeup (short run) ..... 11-6402-11

Reuseable Shipping Container ..... 493963-2

Interchannel Event Marker (includes pen when ordered with recorder) ..... 887181

500 Watt Portable Isolation Transformer (for patient care applications) ..... 882895-3 (115Vac)
882895-4 (230Vac)

## TABLE 1-1 2400S RECORDER MODEL NUMBERING SYSTEM

**Model Number**

Modular Systems
210X-XX XX-XX

**Code Description**

**Operating Voltages**

| | |
|---|---|
| 00 | 115Vac, 50-400 Hz, ÷ 100 chart speeds |
| 01 | 100Vac, 50-400 Hz, ÷ 100 chart speeds |
| 06 | 230Vac, 50-400 Hz, ÷ 100 chart speeds |
| 07 | 200Vac, 50-400 Hz, ÷ 100 chart speeds |

**Type of Mounting and Amplifier Cage Configuration**

| | |
|---|---|
| 00 | Portable case, for recorder only |
| 02* | Portable case, 2-amplifier cage |
| 04† | Portable case, 4-amplifier cage |
| 40 | Rack-mounting kit, vertical cabinet, ac power kit, for recorder only |
| 42* | Rack-mounting kit, vertcial cabinet, ac power kit, 2-amplifier cage |
| 44 | Rack-mounting kit, vertical cabinet, ac power kit, 4-amplifier cage |
| 60 | Rack-mounting kit, vertical cabinet, 30-μA isolated power kit, for recorder only |
| 62* | Rack-mounting kit, vertical cabinet, 30-μA isolated power kit, 2-amplifier cage |
| 64 | Rack-mounting kit, vertical cabinet, 30-μA isolated power kit, 4-amplifier cage |
| 70 | Rack-mounting kit, for recorder only |
| 72* | Rack-mounting kit, 2-amplifier cage |
| 74 | Rack-mounting kit, 4-amplifier cage |

**Number of Channels**

| | |
|---|---|
| 42 | Two 100-mm channels, chassis assembly, drive amplifiers, timer |
| 43* | One 100-mm, two 50-mm channels, chassis assembly, drive amplifiers, timer |
| 44 | Four 50-mm channels, chassis assembly, drive amplifiers, timer |

**Marking Method**

| | |
|---|---|
| 7 | Pressurized Fluid |
| 8 | Thermal |

*For pressurized-fluid marking models only.
†Not available on 2 channel models.

| REVISIONS | | |
|---|---|---|
| ADDED MODEL NUMBERS | | |
| DELETED MODEL NOS 2007-4300-36, -36 | -16 -76 | |
| ADDED MODEL NO. 2008- | | CZECH |
| ADDED MODEL 2107- 2108- | 10-21 -80 | WILLS |

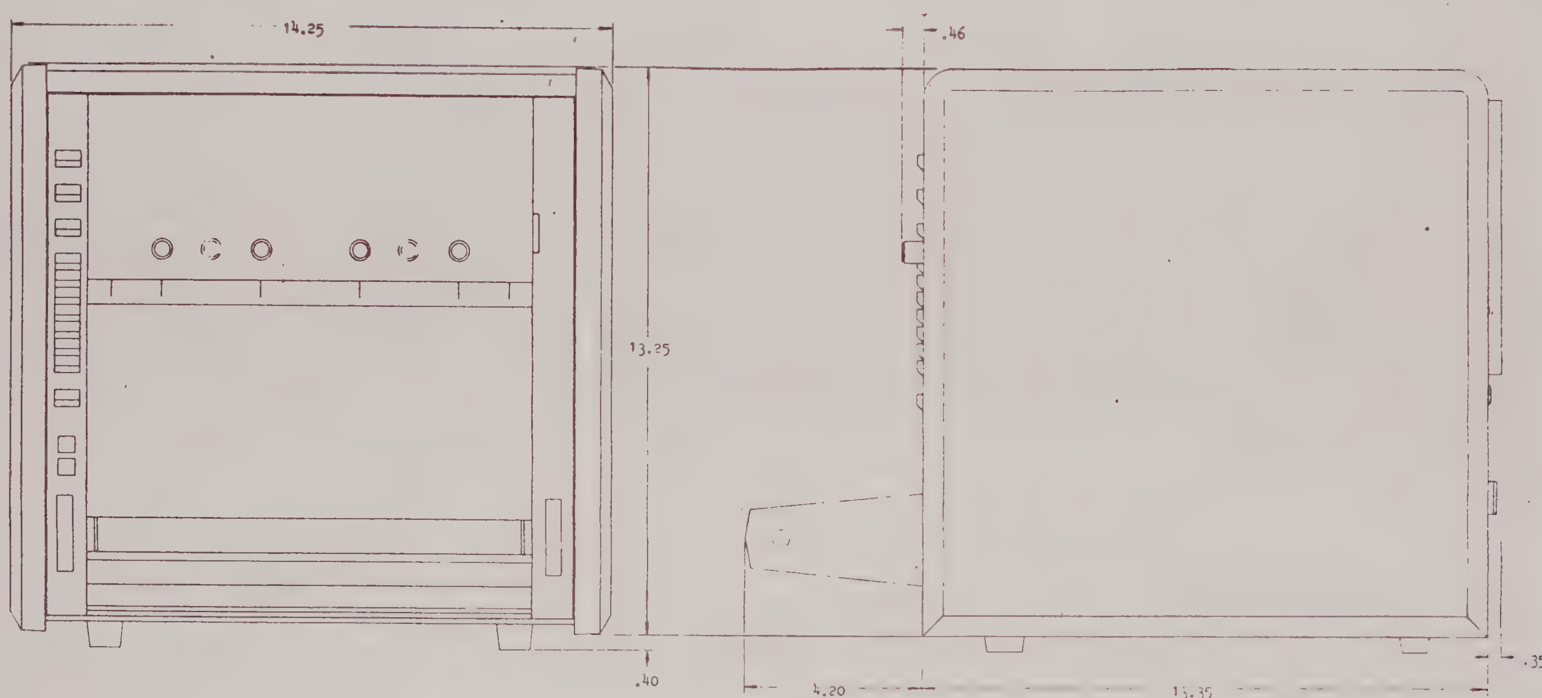


| | | | |
|---|---|---|---|
| 2007-4200-20 | 2007-4400-16 | 2007-4300-16 | 2007-4200-16 |
| 2007-4200-26 | 2007-4400-15 | 2007-4300-15 | 2007-4200-15 |
| 2008-44xx-XX | 2007-4400-14 | 2007-4300-14 | 2007-4200-14 |
| 2107-4200-XX | 2007-4400-10 | 2007-4300-10 | [illegible] |
| 2107-4300-XX | 2007-4400-06 | 2007-4300-06 | [illegible] |
| 2107-4400-XX | 2007-4400-05 | 2007-4300-05 | [illegible] |
| 2108-4400-XX | 2007-4400-04 | 2007-4300-04 | [illegible] |
| | 2007-4400-00 | 2007-4300-00 | [illegible] |

APPLICABLE FOR ABOVE MODELS

OUTLINE DIMENSIONAL

Gould Inc.
Instrument Systems Division
Cleveland, Ohio U.S.A.

CODE IDENT 96795

DWG NO 287000

THIS DRAWING IS USED BY OTHER GOULD DIVISIONS AND/OR LOCATIONS. A F

FIGURE 1-2 OUTLINE DIMENSIONS - 2400S SERIES

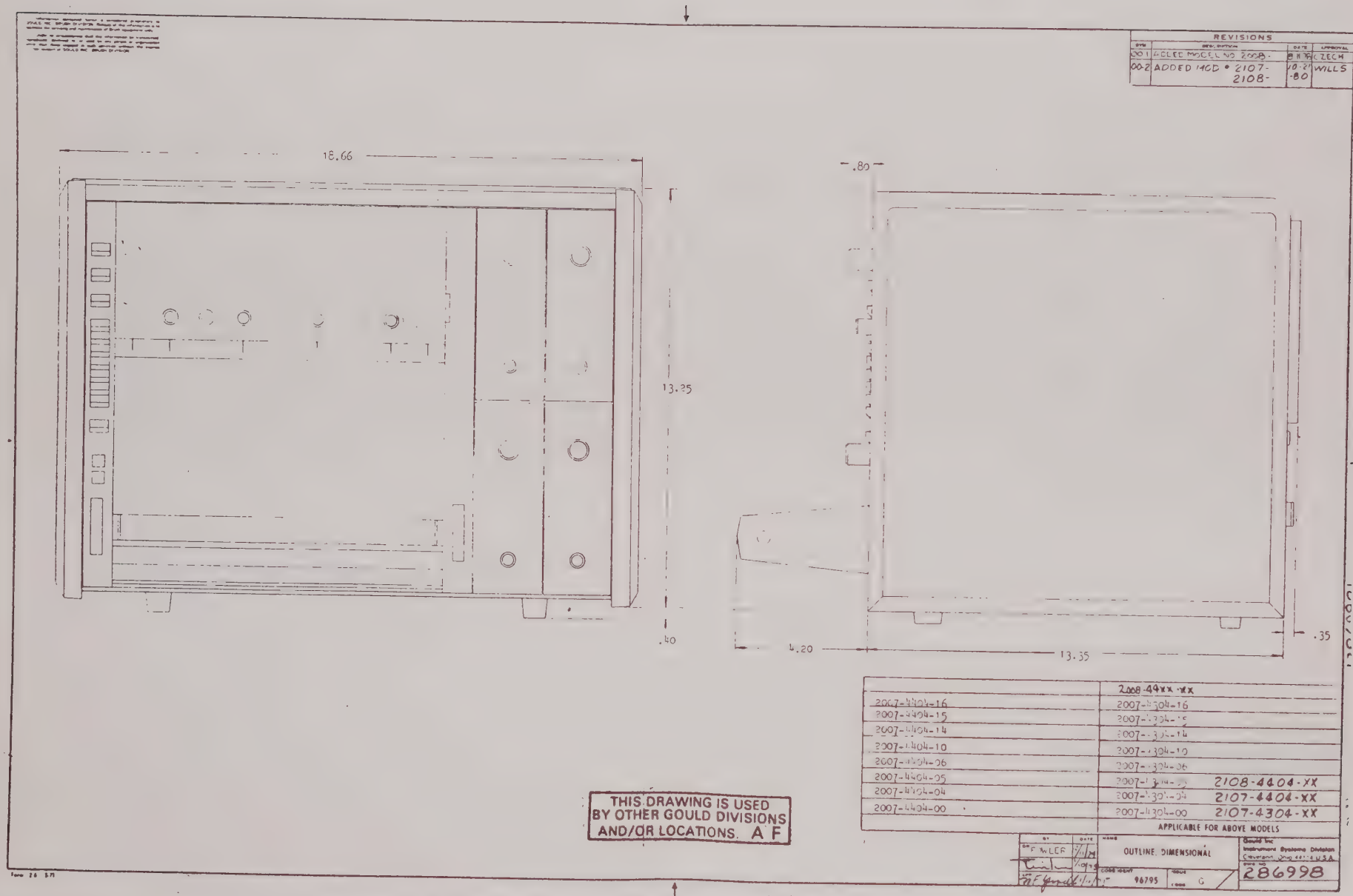


FIGURE 1-3 OUTLINE DIMENSIONS - 2400S SERIES WITH 4 PREAMPS

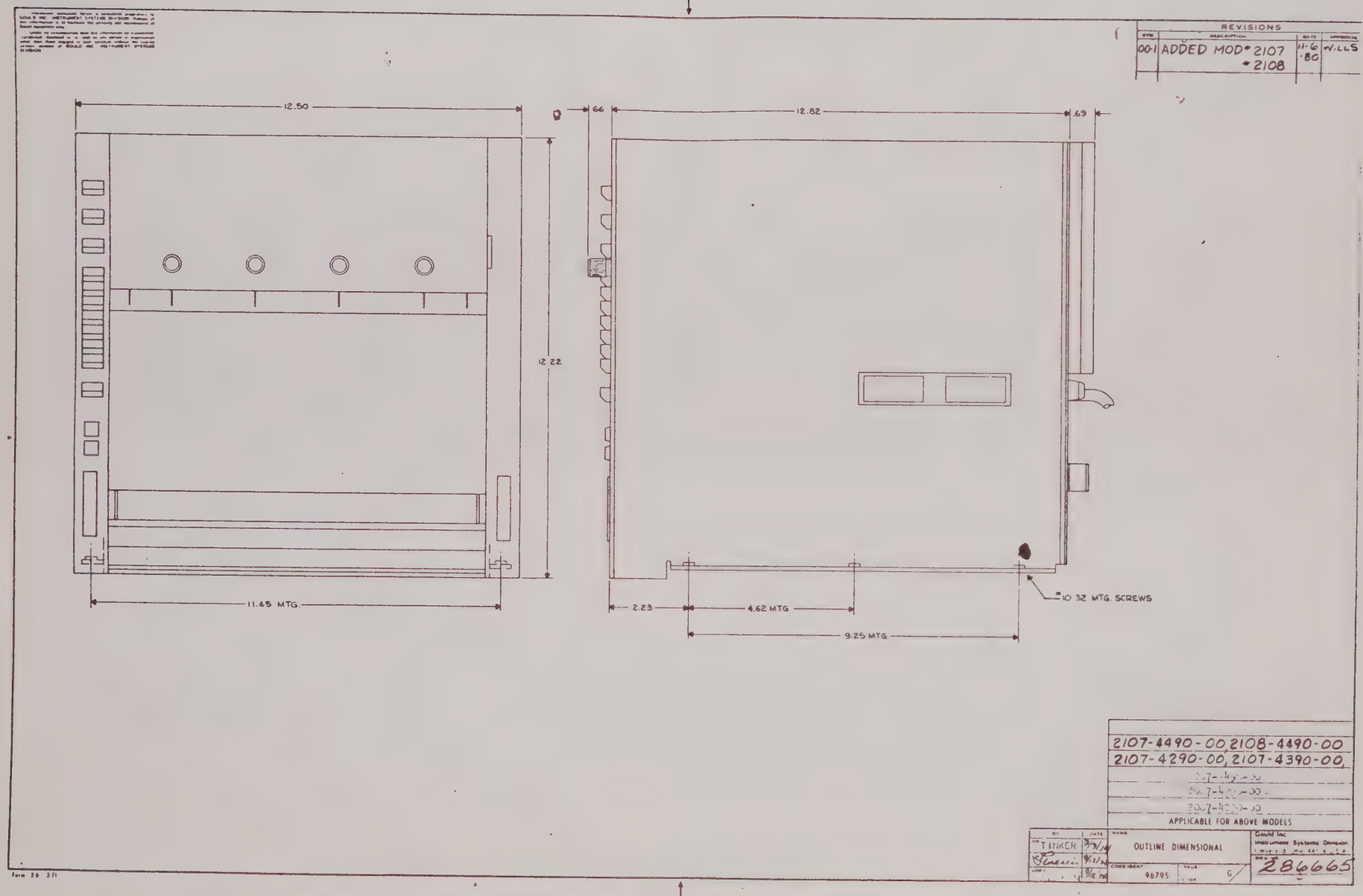


FIGURE 1-4 OUTLINE DIMENSIONS - 2400S RECORDER - PORTABLE W/O CASE

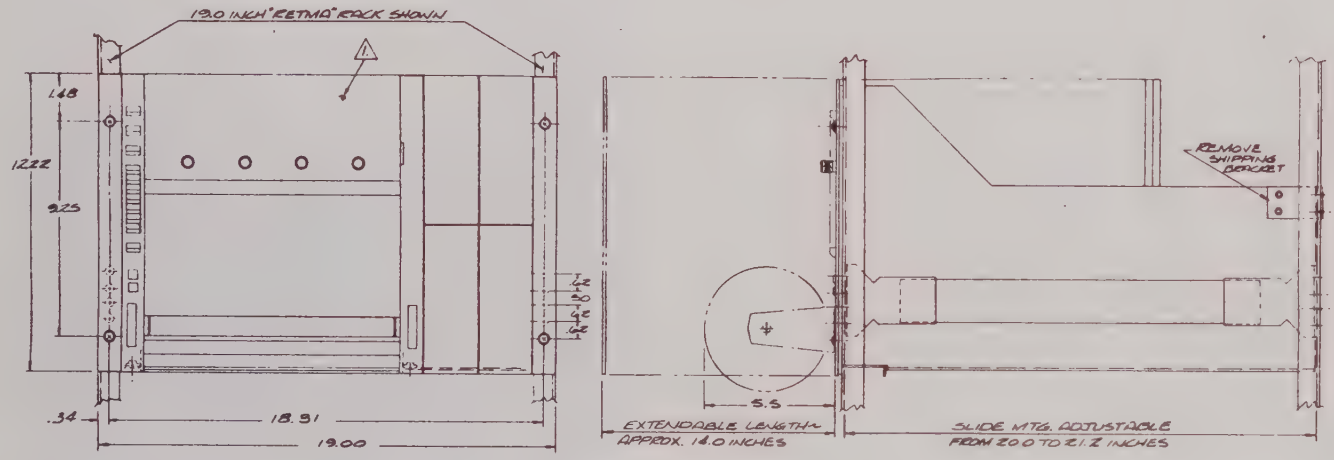


| REVISIONS | | | |
|---|---|---|---|
| STR | DESCRIPTION | DATE | APPROVAL |
| 00-1 | ADDED 2008-6XXX-XX | 4-24-84 | CZECH |
| 002 | ADDED 2008-2XXX-XX | 8-21-84 | CZECH |
| 003 | ADDED 2107-2XXX-XX | 5-1-85 | WHITLOCK |
| 004 | ADDED 2108-2XXX-XX | 5-1-86 | WILLS |
| 005 | ADDED 2107-6XXX-XX<br>2108-6XXX-XX<br>2107-4XXX-XX<br>2108-4XXX-XX | 9-86 | WILLS |

1. FRONT VIEW OF 2007-1474-XX IS SHOWN. DIMENSIONS REMAIN THE SAME FOR ALL OTHER RACK MOUNTED VERSIONS OF 2200 & 2400 RECORDERS.

NOTES:

| APPLICABLE FOR ABOVE MODELS |
|---|
| 2108-2XXX-XX |
| 2107-2XXX-XX |
| 2006-2XXX-XX 2108-4XXX-XX |
| 2008-6XXX-XX 2107-4XXX-XX |
| 2107-XXXX-XX 2108-6XXX-XX |
| 2108-XXXX-XX 2107-6XXX-XX |

| | | | |
|---|---|---|---|
| BY | DATE | NAME | Gould Inc. Instruments Systems Division |
| C. TOWER | 7/1 | OUTLINE DIMENSIONAL | |
| | 7/16 | CODE IDENT 96705 | DWG NO 288844 |
| | 5/8 | | |

12888441

Form 28 371

FIGURE 1-5 OUTLINE DIMENSIONS - 2400S RACK MOUNT

# SECTION II

# INSTALLATION

## 2.1 GENERAL

This section contains information necessary to put the recorder into service, including installation of optional equipment.

## 2.2 SERVICE UPON RECEIPT

*CAUTION: POWER MUST BE OFF DURING THE FOLLOWING SEQUENCE.*

Before making signal connections and applying power to the recorder, the following service must be performed:

1. Remove sheet of chart paper from under pens and load roll of chart paper as described in Section V.

2. Slide all manual ink valves with tubing attached to ON position. (Follow direction of arrows on manifold bar.) Valves are located on top of recorder. Remove the recorder top front cover to gain access to valves. Slide cover forward and lift out. (If recorder is rack mounted, slide recorder out of rack.

3. Ink cartridge and ink solenoid valve is turned on prior to shipment from factory.

**NOTE: Ink cartridge should be near full.**

4. Place cover back in position (or slide recorder back into rack and secure).

## 2.3 LINE VOLTAGE REQUIREMENTS

The last digit of the model number designates line voltage. Frequency range for all models is 50-400Hz. Listed below is last digit of model number and required line voltage.

| DIGIT | LINE VOLTAGE |
|---|---|
| 0 | 115 Vac |
| 1 | 100 Vac |
| 6 | 230 Vac |
| 7 | 200 Vac |

**CAUTION: MAKE SURE A.C. JUMPER BOARD IS IN CORRECT POSITION. (PARA. 2.9).**

## 2.4 ANALOG SIGNAL CONNECTIONS

### 2.4.1 Without Preamplifiers

On recorders not supplied with preamplifiers, signal input connections are made directly to pen drive amplifiers. Two phone jacks are provided on each drive amplifier. They are located on the rear of the recorder (Figure 2-1). Use shielded cable (Belden 8422 or equal) with mating phone plugs provided. Tips are high; rings are low; barrels are common.

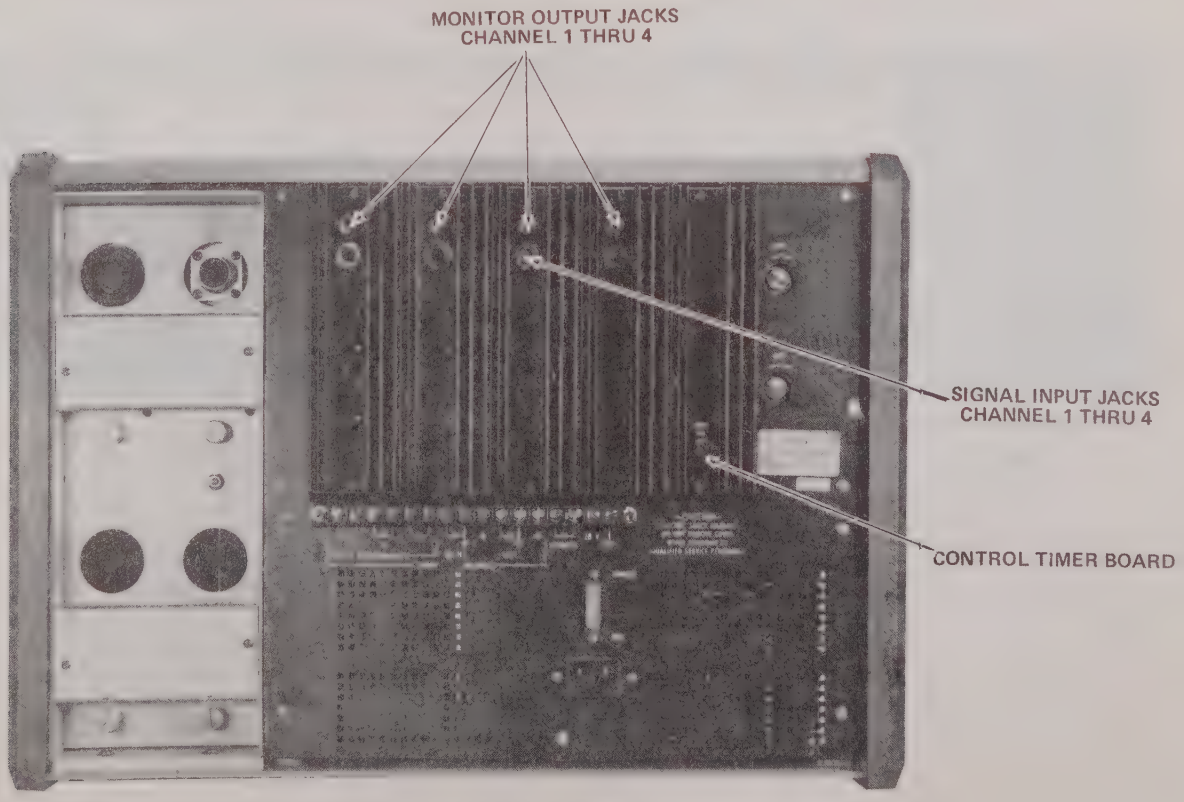


FIGURE 2-1 SIGNAL INPUT CONNECTIONS

### 2.4.2 With Preamplifiers

On recorders supplied with preamplifiers, signal input connections are made via a connector located in the preamplifier cage. Refer to applicable preamplifier manual for their signal input connections.

## 2.5 EVENT MARKER INPUTS

### 2.5.1 Standard Event Markers

Left and right markers are standard. Actuation is made by momentary switches on front panel or externally via the terminal strip located on recorder rear panel. External actuation may be made by contact closure or TTL signal input. Refer to Figure 2-2 for connections.

### 2.5.2 Optional Event Marker

Interchannel optional event marker is actuated by a contact closure via the rear panel terminal strip. Refer to Figure 2-2 for connections.

## 2.6 REMOTE CHART DRIVE (Stop/Start)

For remote chart drive operation, remove jumper between pins 3 and 4 on rear panel terminal strip. Front Panel speeds are disabled during remote operation. A contact closure across these pins will "remote enable" chart drive motor. Refer to Figure 2-2. Chart SPEED must be pre-selected. Remote Start/Stop operation is covered in para. 3.6. Can also be operated via J-102 covered in para. 3.7.

NOTE:

1. The Remote (Start/Stop) link TB101-3 and 4 should only be used when there are no accessories connected to the +28 volt supply (i.e., Z-Fold, Event Marker Driver, etc.).

2. When accessories such as Z-Fold, Event Marker Driver, etc. are connected to the +28 volt supply, the Remote (Start/Stop) operation has to be used via the J-102 Remote input connector located on the rear of the recorder. This will allow all power to be removed from the accessory units when the recorder is remotely stopped.

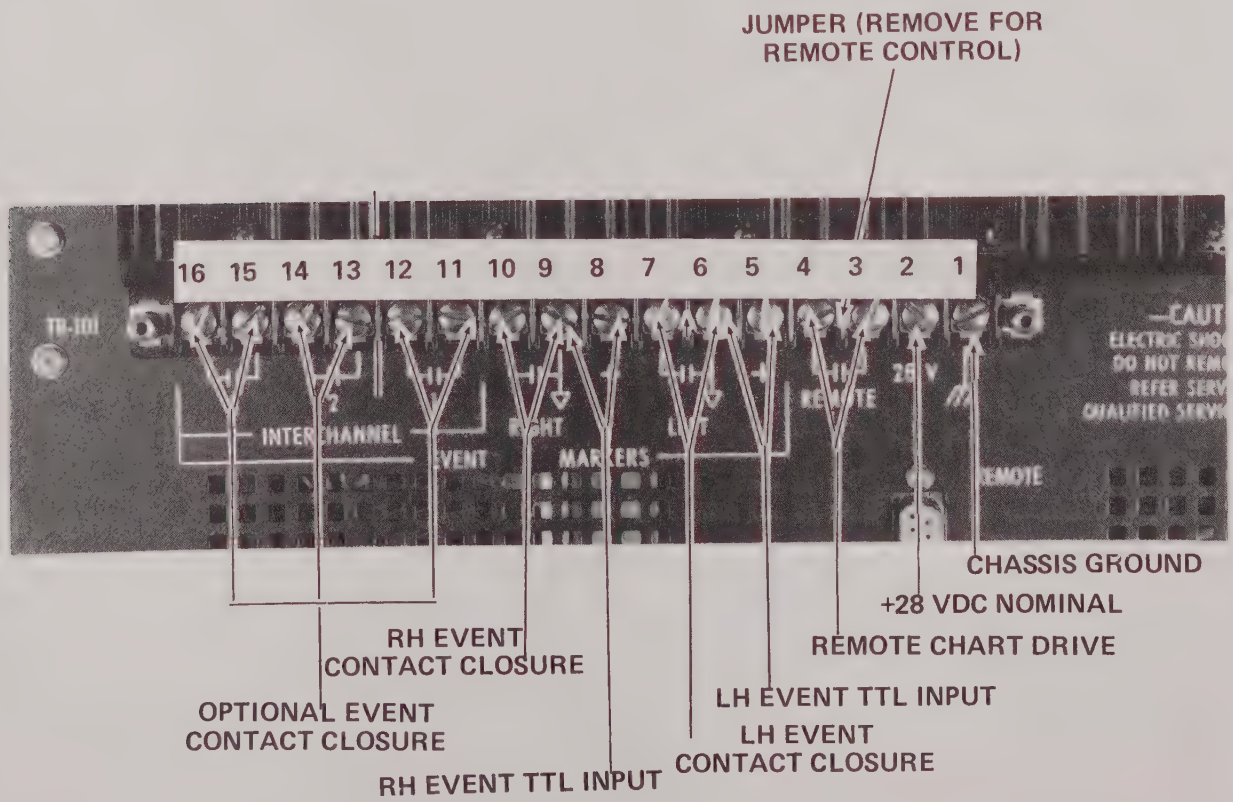


FIGURE 2-2 REAR PANEL TERMINAL CONNECTIONS

## 2.7 CHART TAKE-UP INSTALLATION

Refer to Figure 2-3, and install the optional chart take-up as follows:

1. Disconnect recorder from power source.
2. Remove case from recorder as described in para. 5.3.6 (or slide recorder about 6 inches out of rack).
3. Remove plastic caps covering slots in front panel.
4. Position chart take-up on front panel with drive belt on left side. Secure with screws and lockwashers.
5. Slide pulley onto drive roll shaft, and secure with cotter pin.
6. Position drive belt over pulley.
7. Reinstall case.

## 2.8 RACK MOUNTING KITS

Rack mounting kit for recorder without preamps is Model 11-1202-11; for recorder with 2 channel preamp cage use Model 11-1202-13. Installation instructions are included with each kit.

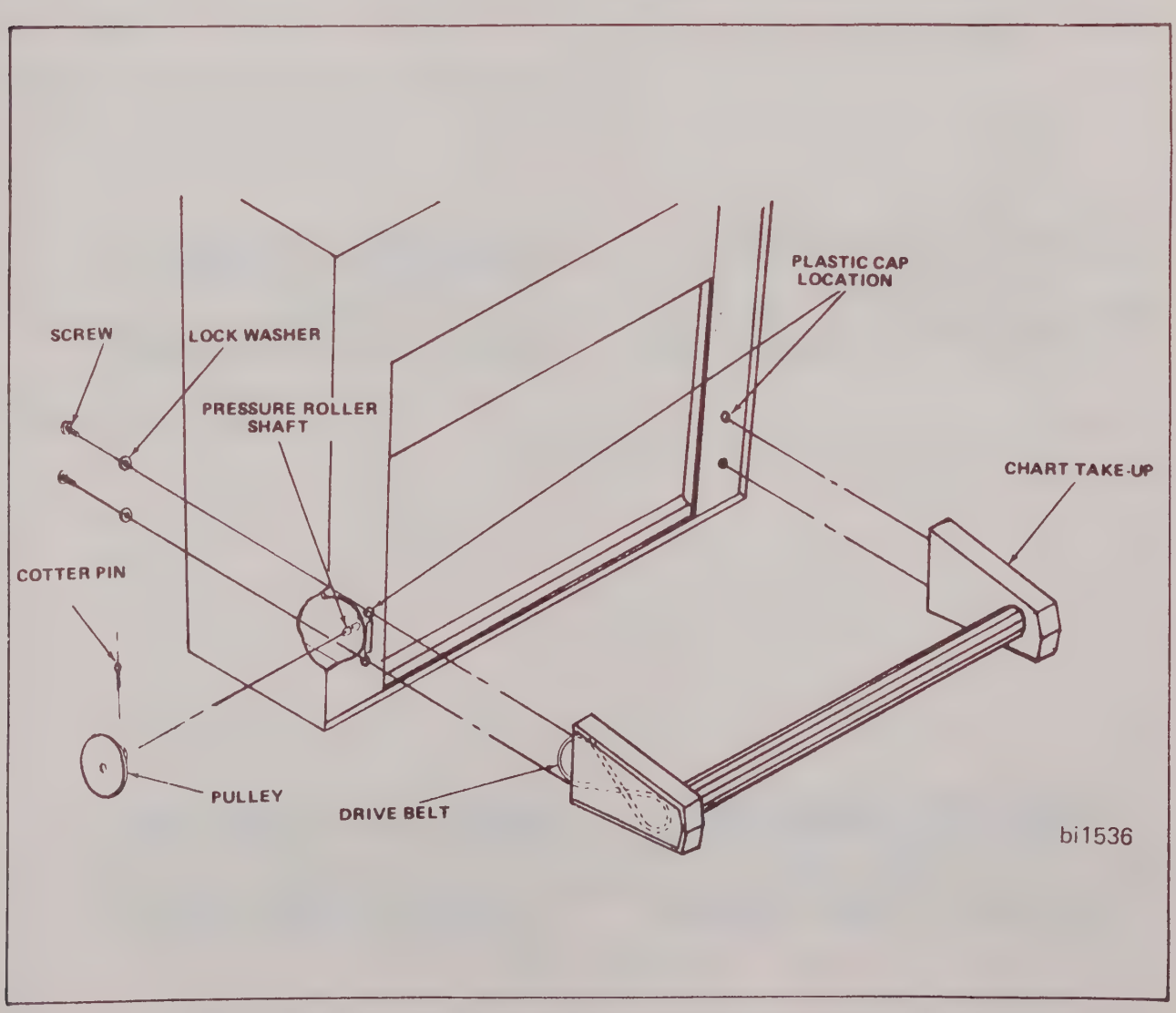


FIGURE 2-3 CHART TAKE–UP INSTALLATION

## 2.9 A.C. JUMPER BOARD

WARNING: REMOVE POWER SOURCE.

If it becomes desirable to operate the recorder at some voltage other than the specified one, the A.C. Jumper Board (Figure 2-4) must be repositioned, and the fuses replaced.

The A.C. Jumper Board is located behind the writing table. To gain access to the board, open the table and remove the chart paper roll (para. 5.3.6). The board will immediately become visible when looking into the recorder. The voltage the unit is set to operate at appears on the left side of the board.

The procedure that follows describes repositioning the A.C. Jumper Board.

1. Carefully place screwdriver blade between "EAR" of board and "CONNECTOR" and pry board upward from connector, first from one "EAR", then the other (See Fig. 2-4.)
2. Remove board from recorder once loosened. Select desired voltage, reading voltage number on left side of board (facing reader).
3. Place board back into connector making sure it is seated correctly.
4. Install appropriate fuses on Control Timer board. Refer to Table 4-1 for options.
5. Replace chart paper roll and close writing table. Refer to Section III, Operation, before attempting to operate recorder.

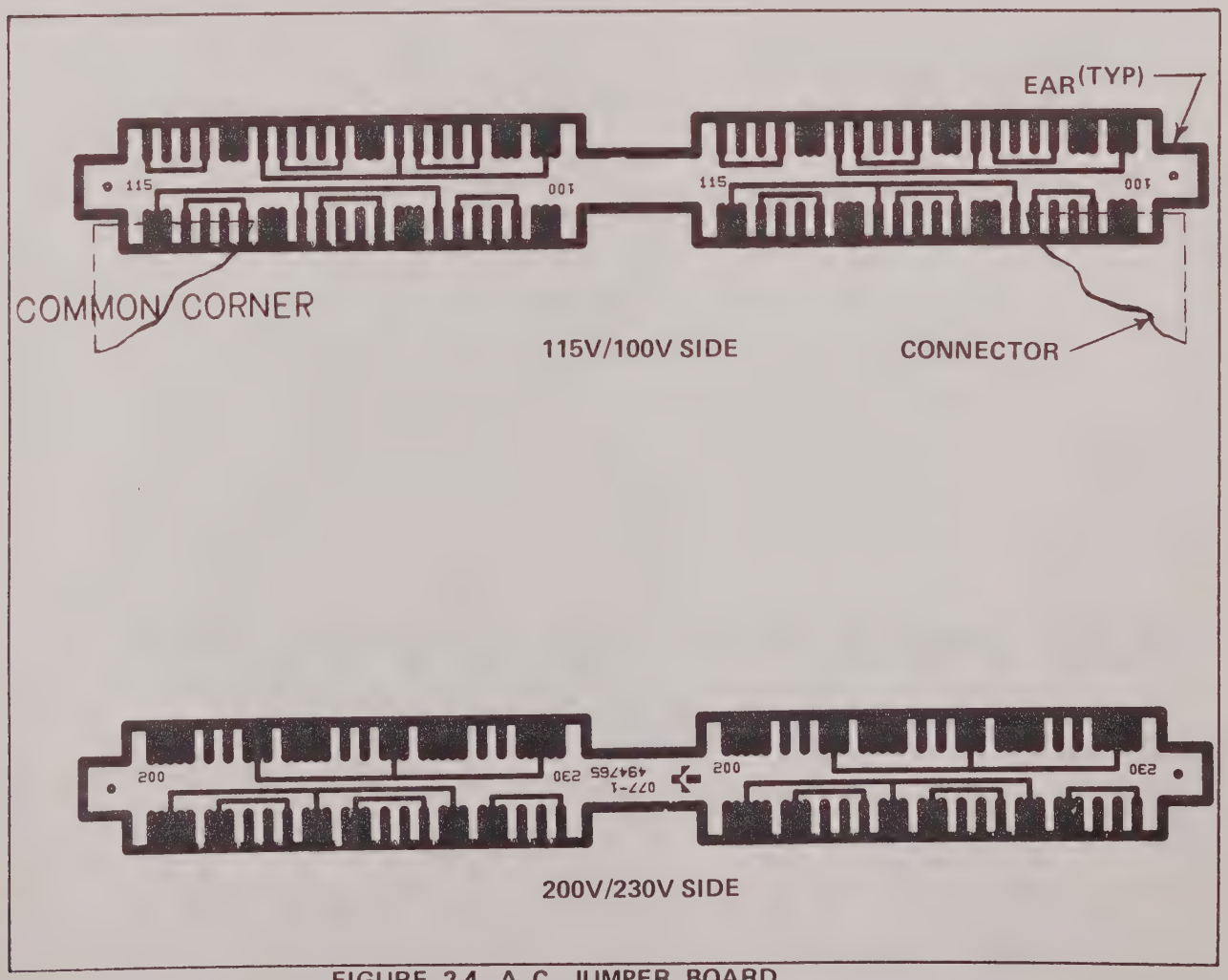


FIGURE 2-4 A. C. JUMPER BOARD

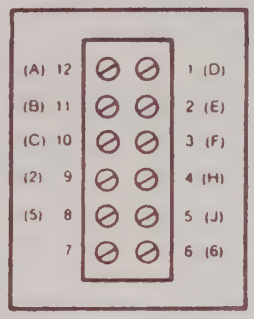


(CARD EDGE CONNECTIONS ARE IN PARENTHESIS)

SPADE LUG TERMINAL BOARD FROM PORTABLE CARRYING CASE

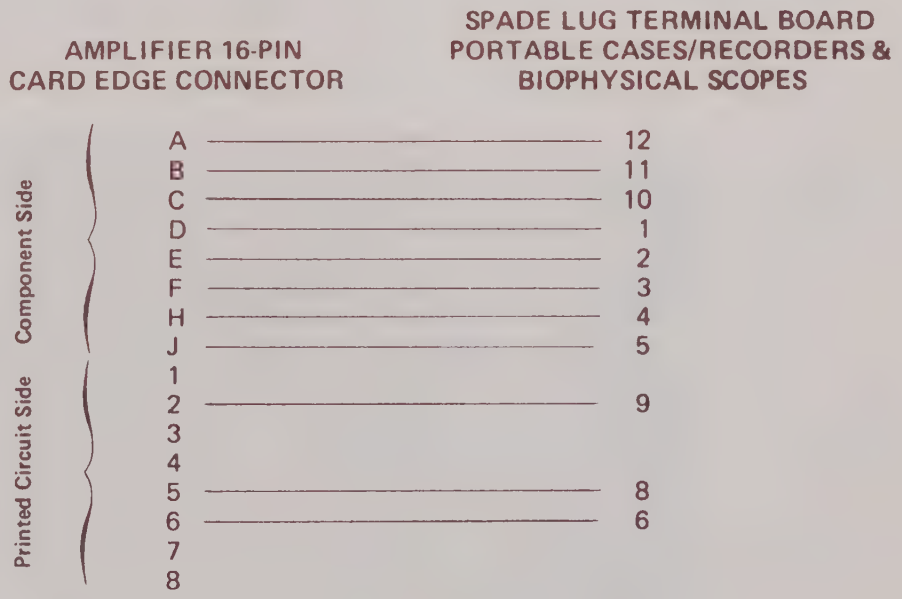


FIGURE 2-4A PORTABLE 2000S SERIES INPUT AND OUTPUT CONNECTIONS TO 4600 SERIES AMPLIFIERS

# SECTION III

# OPERATION

## 3.1 GENERAL

This section provides complete instructions for operation of the recorder. Functional descriptions of the controls and indicators are provided. If the recorder is equipped with preamplifiers, refer to their applicable instruction manuals for operating instructions.

**CAUTION: NEVER APPLY POWER TO RECORDER WITH POWER BUTTON IN "ON" POSITION.**

## 3.2 FRONT PANEL CONTROLS & INDICATORS

Figure 3-1 illustrates the front panel controls and indicators. The list that follows on page 3.2 corresponds to the items called out on Figure 3-1.

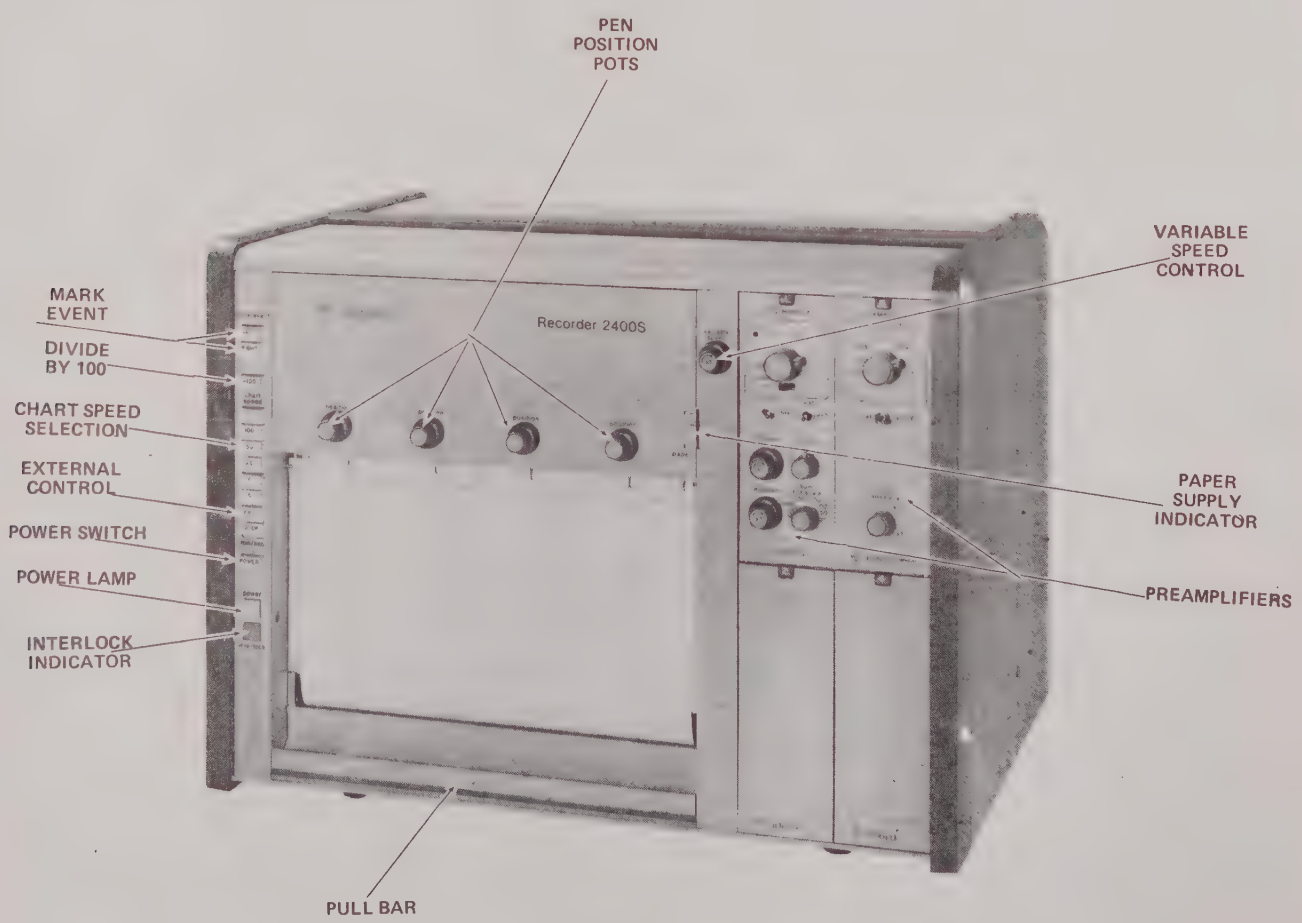


**FIGURE 3-1 FRONT PANEL CONTROLS & INDICATORS**

| CONTROLS | DESCRIPTION |
|---|---|
| POWER SWITCH/POWER LAMP | Controls AC to recorder. Depress to turn recorder ON or OFF. POWER lamp is lighted when recorder is ON. |
| CHART SPEED SELECTION | Permits selection of six calibrated chart speeds of 5, 10, 25, 50, 100 and 200mm/second and STOP. When in STOP position chart drive is off, and pens will not respond to input signals. Depressing any chart speed button will activate the chart drive at the selected speed. Chart speeds may be changed while chart drive is running. However, during remote operation all front panel controls are disabled except for power On/Off pushbutton. |
| DIVIDE BY 100 | When depressed, chart speeds become 0.05, 0.10, 0.25, 0.50, 1.0 and 2.0 mm/second. |
| *VARIABLE SPEED CONTROL | Single turn potentiometer with 270° rotation. Provides continuously variable speeds between calibrated selected chart speed, and overlapping next lower calibrated speed. When control is at full CW (calibrated detent) position (x1), chart speed matches selected speed. As control is rotated CCW chart speed is reduced. When at full CCW position chart speed is slower than next lower calibrated speed. |
| MARK EVENT | Two momentary switches permit manual marking of an event. When left MARK EVENT button is depressed the left event marker pen will deflect to the left. When the right MARK EVENT button is depressed the right event marker pen will deflect to the left.<br>**NOTE: The EVENT MARKER pens will remain deflected until the mark event button is released. Event marker will override timer event marker.** |
| *PEN POSITION POTS | Permits pen positioning anywhere within the channel. |
| PULL BAR | Pull to gain access to chart paper supply roll. |
| INTERLOCK INDICATOR | Lamp lights when writing table is not completely closed or paper supply is exhausted. |
| POWER INDICATOR | Lamp lights when POWER switch is depressed. |
| PAPER SUPPLY INDICATOR | Gauge to indicate quantity of chart paper remaining. |
| EXTERNAL CONTROL | Used in conjunction with J-102, remote control connector. Switches chart drive from internal speed to external pulse input. (See Table 3-2 and 3-3). |
| PREAMPLIFIERS | Refer to applicable preamplifier manuals for operating instructions. |

* VARIABLE SPEED CONTROL AND PEN POSITION POTS CONTAIN LOCKING KNOBS.

## 3.3 REAR PANEL

Figure 3-2 illustrates the recorder rear panel. The list that follows corresponds to the items called out on Figure 3-2.

| CONTROLS | DESCRIPTION |
|---|---|
| PREAMP CAGE | Houses preamplifiers if part of the recorder system. |
| SIGNAL INPUT | Jacks for signal input direct to drive amplifiers. (overrides preamplifiers). |
| TERMINAL STRIP (TB-101) | Refer to para. 2.5 for description. |
| TIMER | ON/OFF toggle switch for timed left hand event marker activation. See section 3.4. |
| MONITOR JACK | Monitors output of preamplifier (regardless of chart display). For use on Scope, Meter, Output panel, etc. |
| REMOTE CONTROL CONNECTOR (J-102) | Allows for recorder to be operated from remote location. When proper inputs are made to J-102. See Section 3.7. |
| POWER INPUT CONNECTOR (J-101) | Connector accepts external power, i.e., 115/230V, 50-400Hz. |

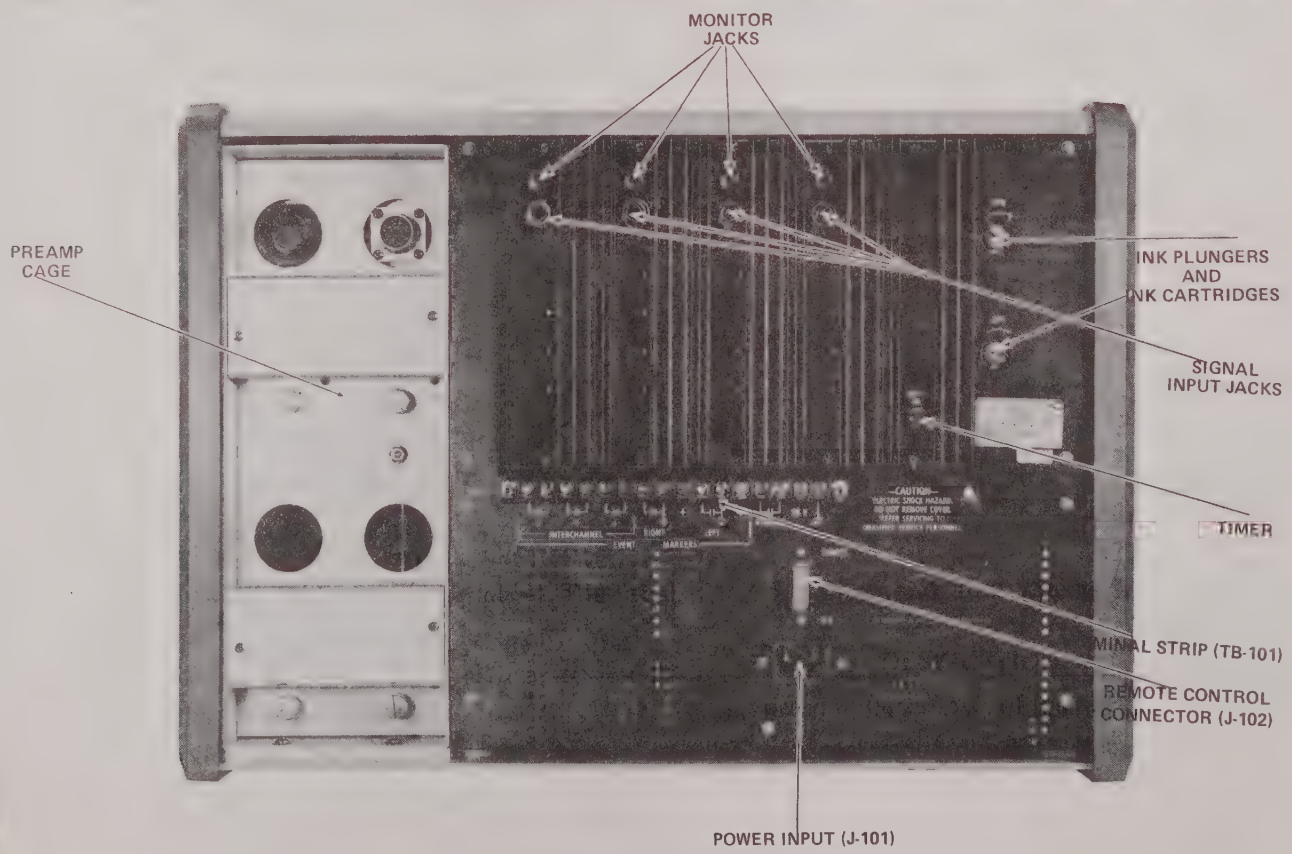


**FIGURE 3-2 REAR PANEL**

## 3.4 TIMER SETTING

The timer actuates left event markers at a programmed repetition rate. Selection of repetition rates is made via switch S-702 on the control board.

Set rate as follows:

**NOTE: If the customer wishes timer to be actuate right event marker see para. 3.5.**

1. Turn recorder power OFF.
2. Loosen the two screws which secure Control/Timer board and pull board out of recorder. (See Fig. 3-2).
3. Set switch positions for desired repetition rate per Table 3-1.
4. Replace control timer board and secure with screws.
5. Turn recorder power ON.
6. Turn TIMER switch ON. Timer ready for operation.

TABLE 3-1 SWITCH SETTINGS VS. TIMER REPETITION RATE

| REPETITION RATE | SETTINGS | |
|---|---|---|
| | SW ON | SW OFF |
| 0.1 SECOND | 1, 3 | 2, 4, 5, 6, 7, 8 |
| 1.0 SECOND | 1, 4 | 2, 3, 5, 6, 7, 8 |
| 10.0 SECONDS | 1, 5 | 2, 3, 4, 6, 7, 8 |
| 100.0 SECONDS | 1, 6 | 2, 3, 4, 5, 7, 8 |
| 0.01 MINUTE | 2, 3 | 1, 4, 5, 6, 7, 8 |
| 0.10 MINUTE | 2, 4 | 1, 3, 5, 6, 7, 8 |
| 1.00 MINUTE | 2, 5 | 1, 3, 4, 6, 7, 8 |
| 10.00 MINUTES | 2, 6 | 1, 3, 4, 5, 7, 8 |

## 3.5 RIGHT EVENT TIMER ACTUATION

By the removal of one resistor and the addition of another on the control/timer board, the timer will actuate the right hand event marker.

Procedure for right event timing marks are as follows:

1. Turn recorder power OFF and disconnect AC power.
2. Remove the two screws which secure control/timer board and pull board out of recorder.
3. Locate resistor R708 on the control/timer board and remove it.
4. Add resistor R709 to control/timer board, 3.3K ohm ±5% ¼ watt carbon resistor part number 5-241111-332.
5. Replace control/timer board and secure with screws.
6. Turn recorder power on.
7. Turn TIMER switch on. Right hand event marker should be responding to programmed repetition rate.

## 3.6 SET-UP AND OPERATION

Prepare recorder for operation as follows:

*CAUTION: MAKE SURE ALL PROCEDURES DESCRIBED IN SECTION II, INSTALLATION HAVE BEEN PERFORMED.*

1. Connect power source to recorder via power cable.
2. Check chart paper supply level. Make sure and adequate supply is present for length of time recorder is to be operated and that paper is properly threaded.
3. Check that chart STOP pushbutton is depressed (in).
4. Depress POWER pushbutton. POWER lamp will illuminate.
5. Set variable speed control full clockwise. to detent.
6. Depress 5mm/sec calibrated chart speed pushbutton. Allow chart to travel about one foot. Press STOP button. Vertical traces from analog pen(s) down the center of the chart and vertical traces with timed marks (per para. 3.4) from the event marker pens on the chart edges will appear.
7. Depress 5mm/sec chart speed pushbutton. Rotate pen position control(s) allowing analog pen travel to show full scale deflection within chart limits. Center pen(s) on chart with pen position control(s). Press STOP button.
8. Apply input signal(s) to recorder.

9. Depress calibrated chart speed pushbutton to that chart speed which best displays signal. Speed may be fractionally reduced as low as next slower calibrated speed by rotating variable speed control counterclockwise. Lock control in place when desired speed is attained.

10. When recorded data is completed, remove input signal(s), depress STOP button, and rotate variable speed control full clockwise unless setting is desired for recording future data.

11. Remove power by releasing POWER push-button.

### 3.7 REMOTE CONTROL OPERATION

The recorder may be operated remotely thru remote control connector J-102 located on the rear panel of the recorder. To attain this, mating connector P-102 (shipped loose with recorder) must be wired and signals provided per Tables 3.2 and 3.3. Page 1 of schematic diagram 294232 located at the rear manual may be used as an aid. Signals S1 thru S4, STOP, ENABLE, and x100 are pulled to a logic 1 internally. The stop signal pin number 1 of J-102 will override front panel speed selection if connected to a logic 0.

### 3.8 ELECTRICAL APPLICATIONS

The 2400S uses the 74LSXX Series, which is low power Schottky. The power consumption is 2mW/Gate, and the speed is 18nsec. The Schottky diode prevents the transistor from saturating, allowing it to switch faster.

Typical TTL electrical characteristics:

| | |
|---|---|
| Supply Voltage | 5V |
| Minimum High Voltage | 2.4V |
| Maximum Low Voltage | 0.4V |
| Fan Out | 10 |
| Power Consumption | 9mW/Gate |
| Noise Immunity | 20% |
| Speed | 15nSec. |

Ext. Pulse Input - 3 TTL loads, minimum of 10 μsec. positive pulse width from 0-20 KHz. Stepping occurs on negative transition of pulse. 79.8 pulses/mm.

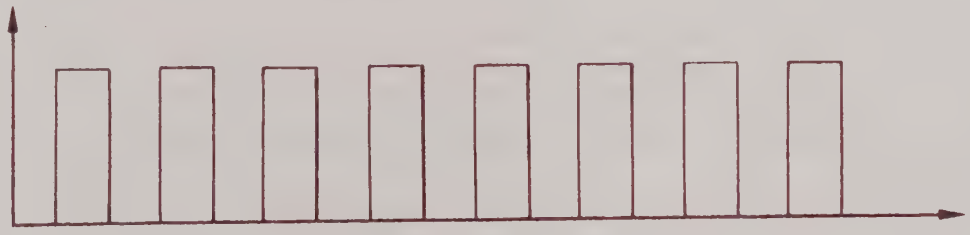

MASTER/SLAVE CONFIGURATION

2XXXS can synchronize up to 12 cascaded units. Each cable should be shielded, and should not exceed 2 feet in length.

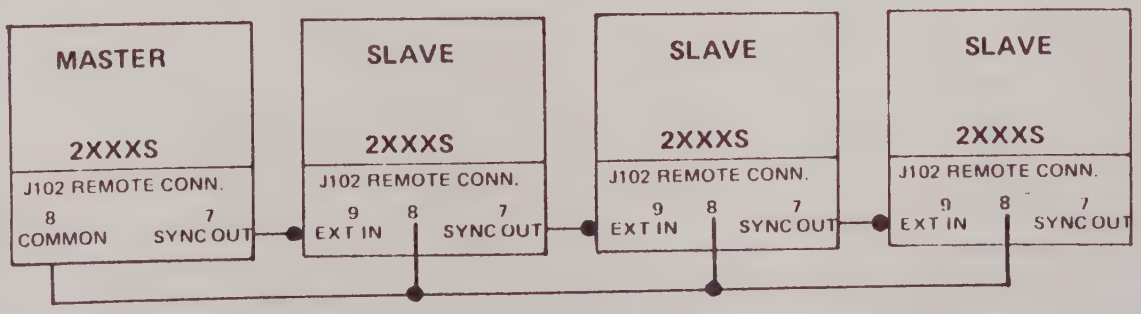


FIGURE 3-3 EXTERNAL PULSE REQUIREMENTS

TABLE 3-2 SIGNAL INPUTS FOR REMOTE OPERATION

| PIN NO | SIGNAL NAME | DESCRIPTION |
|---|---|---|
| 1 | $\overline{\text{STOP}}$ | 0 = Stop, 1 = Go. Same function as remote start/stop link on TB-101, terminals 3 & 4. |
| 2 | $\overline{\text{S3}}$ | See Table 3-3 for Remote. |
| 3 | $\overline{\text{S2}}$ | Speed Select Bits speed |
| 4 | $\overline{\text{S1}}$ | assignments |
| 5 | $\overline{\text{S4}}$ | |
| 6 | $\overline{\text{ENABLE}}$ | 0 = Remote, 1 = Local. Enables remote speed select bits, pins 2 thru 5. 0 = TTL voltage of ground or 0V, and 1 = TTL voltage of 5V. |
| 7 | REMOTE SYNC | Output pulse with each motor step. Used to slave another recorder to Master. |
| 8 | COMMON | Logic 0 |
| 9 | $\overline{\text{EXT}}$ | External pulse for step per pulse operation. (See Fig. 3-3) |
| 10 | X100 | Defeats ÷ 100 button on front panel active only in local mode. |

TABLE 3-3 REMOTE CONTROL PIN SPEED ASSIGNMENTS

| SIGNAL NAME | | | | SPEED |
|---|---|---|---|---|
| S1 | S2 | S3 | S4 | |
| 0 | 0 | 0 | 0 | 200mm/sec |
| 0 | 0 | 0 | 1 | 100mm/sec |
| 0 | 0 | 1 | 0 | 50mm/sec |
| 0 | 0 | 1 | 1 | 25mm/sec |
| 0 | 1 | 0 | 0 | External Pulse |
| 0 | 1 | 0 | 1 | 10mm/sec |
| 0 | 1 | 1 | 0 | 5mm/sec |
| 0 | 1 | 1 | 1 | STOP - Stops all speeds |
| 1 | 0 | 0 | 0 | 2mm/sec |
| 1 | 0 | 0 | 1 | 1mm/sec |
| 1 | 0 | 1 | 0 | .5mm/sec |
| 1 | 0 | 1 | 1 | .25mm/sec |
| 1 | 1 | 0 | 0 | External Pulse |
| 1 | 1 | 0 | 1 | .1mm/sec |
| 1 | 1 | 1 | 0 | .05mm/sec |
| 1 | 1 | 1 | 1 | STOP |

**NOTE: Remote Control Operation, overrides all Front Panel Controls except for the power ON/OFF pushbutton.**

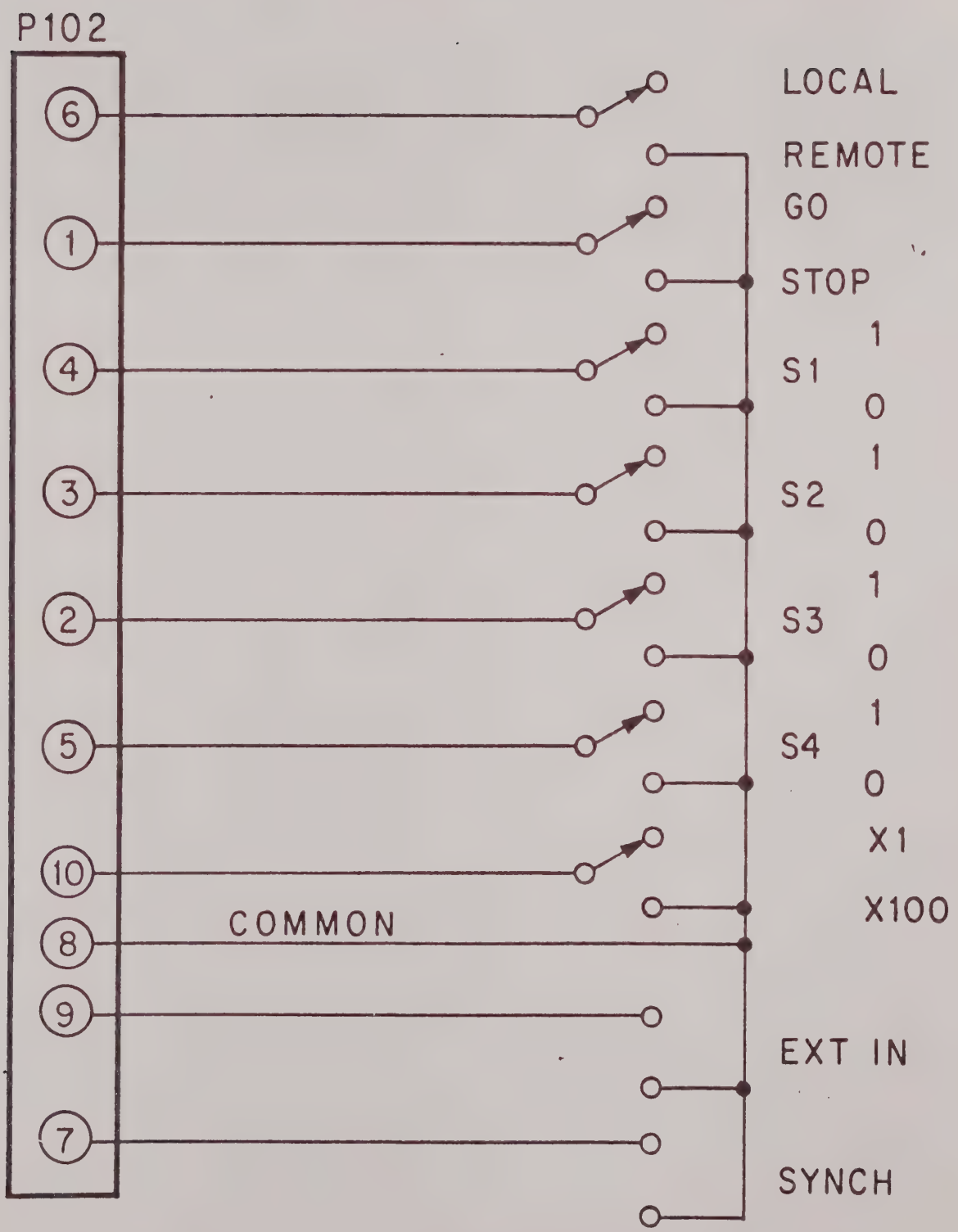


FIGURE 3-4 REMOTE SPEED CONTROL BOX

## 3.9 MASTER/SLAVE OPERATION

The 2000S Series Recorders also have the ability to slave several additional recorders to a Master Recorder. This operation allows the user to run several recorders at the same chart speed as the Master Recorder, up to 100mm/sec chart speed. This is because at 200mm/sec chart speed the software in the Master uses a double pulse frequency waveform to achieve 200mm/sec chart speed and the Slaves never see the double pulse. All Slave Recorders must have the EXTERNAL pushbutton depressed to accept signals from the Master. Also, when the STOP button is depressed on the Master, the paper on the Master and Slaves stops as would be expected, and event pens and analog pens are inhibited. The Slaves can be manually operated at any time. For Master/Slave wiring and hook-up refer to Figure 3-3 and Table 3-2.

# SECTION IV

# THEORY OF OPERATION

## 4.1 GENERAL

The 2400S Series Recorder is a modular-constructed unit consisting of a 250mm (total chart width) mainframe and 2-100mm or 1-100mm and 2-50mm or 4-50mm analog recording channels. Each channel is electrically identical. Figure 4-1 illustrates a block diagram of the basic recorder.

Preamplifiers are optional and are discussed in their respective instruction manuals.

## 4.2 MAINFRAME

The mainframe contains a Speed Select Board, Control Timer Board, Control Transformer, Chart Drive Motor, Event Markers, Switching Amp Board, Sensor Board, Variable Speed Board, and an A.C. Distribution Board.

### a. Speed Select Board

The Speed Select Board is mounted on the left side of the front panel. It contains the operator control switches for POWER ON/OFF, CHART SPEED selection, and EVENT Marker actuation; and indicators for POWER ON and INTERLOCK.

The POWER switch is a set-reset pushbutton which interrupts both phase and neutral sides of the ac power line.

Chart speed selection is made by depressing one of six SPEED, a DIVIDE, or STOP pushbutton. The SPEED and STOP pushbuttons are mechanically interlocked to reset a previously selected pushbutton. The DIVIDE is a set/reset pushbutton. A combination of four binary outputs are activated by the SPEED pushbuttons to obtain the desired chart speed.

Each chart speed may be divided by 60 or 100 (depending upon model number) by depressing the DIVIDE pushbutton. The STOP pushbutton interrupts power to the motor via relay K-701 and resets the SPEED pushbuttons.

When the LEFT or RIGHT MARK EVENT pushbuttons are depressed, solenoids L108 and L109 respectively, are energized activating the left or right event markers. These are momentary pushbuttons, and are reset when released.

### b. Control Timer Board

The Control Timer Board is mounted in the card cage in the rear of the recorder. Contained in the control timer board are the branch fuses, start/stop relay K-701, the +5Vdc and +28Vdc power supplies, and timer.

Fuses are provided to protect each power branch. Table 4-1 shows fuse and circuit protected.

DPDT relay K-701 controls power to the ink solenoids, standard event markers, and optical couplers located in the pen drive amplifiers. It is energized when the chart STOP pushbutton is released. When energized, one set of contacts supplies power to the ink solenoids thru fuse F711 and activates the ink manifold solenoid. When de-energized, the other set of contacts inhibit the event markers and optical couplers in the pen drive amplifier(s).

The control board contains two dc power supplies: +28V and +5V. The +28Vdc power source is obtained from bridge rectifier CR702 and control transformer T109. The unfiltered section of this section of the supply provides power to relay K701, optional event marker solenoids, and the indicator lamps. The filtered section of this supply provides power to the standard event markers to insure accuracy when precise time events are required. The +5Vdc power source is obtained from the power supply board. This supply is filtered and regulated to provide power for the pen drive amplifier optical couplers and timer.

Pulsating dc voltage is provided from bridge rectifier CR701 to operate the ink supply solenoids.

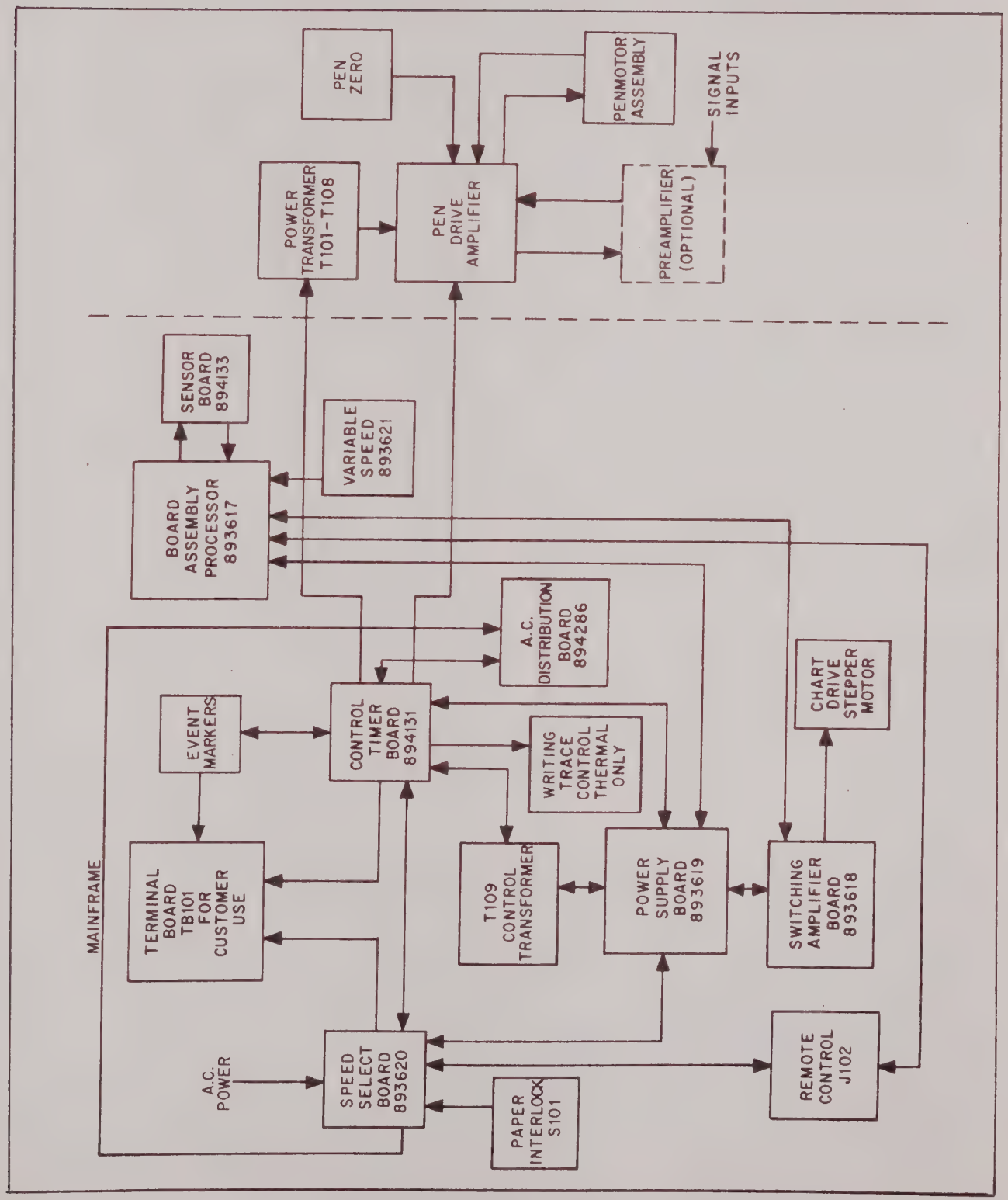


FIGURE 4-1 BLOCK DIAGRAM (OVERALL SYSTEM)

## 4.3 ANALOG RECORDING CHANNELS

### a. General

Each analog recording channel consists of a power transformer, pen drive amplifier, and penmotor. The channels are isolated from one another by using separate transformer power supplies and optical couplers. The optical coupler disables the pen drive amplifier whenever relay K-701 on the control board is de-energized from depressing chart STOP pushbutton or upon loss of ac power.

Each power transformer has two primary and three secondary windings. The primary windings can be wired in parallel for 115Vac operation or in series for 230Vac operation. Two of the secondary windings (±35 and ±15 volts) provide power for the pen drive amplifier. The third (13Vac — may be used in preamplifiers requiring isolated power supplies for bridge excitation or suppression.

Figure 4-2 shows a block diagram of an analog channel. The penmotor drive amplifier is a complete servo system and uses a linear voltage displacement transformer (Metrisite*) in the penmotor to develop position, and a velocity transducer for velocity. These signals are summed with the input signal in a dc error amplifier which, after amplification, drive the penmotor.

### b. Signal Limiter

The input signal enters the signal limiter and is summed with the pen zero signal. The summed signal is fed to a diode bridge circuit. Output from the bridge is limited to ±2.6 volts.

### c. Frequency Compensation Network

Output from the signal limiter is fed to a frequency compensation network. Here, the signal's frequency response is adjusted to be flat within 2% from dc to 65Hz pen deflection and from dc to 125Hz for 10 division pen deflection. The frequency compensated signal is then fed to summing network where it is combined with error and velocity signals.

### d. Oscillator and Demodulator

Position feedback is obtained from the Metrisite. Excitation for the Metrisite is obtained from a 20KHz Wein Bridge Oscillator. A demodulator attenuates the 20KHz carrier. Output from the demodulator is the position feedback signals.

### e. Servo Control Amplifier

The compensated input signal, position feedback, and velocity are summed at the input of the servo amplifier. The output of this stage drives a Class B amplifier, which drives the pen to the proper position on the chart. This occurs when the summed signal is reduced to zero.

## 4.4 STEPPER CHART DRIVE

The 2400S Series Chart Drive Recorder is implemented using a stepper motor as the motion producer. The stepper motor is run in the microstepping mode rather than in the classical full or half stepping mode.

* Registered Trademark of Gould Inc.

TABLE 4-1 FUSE VS CIRCUIT PROTECTED

| FUSE | CIRCUIT PROTECTED |
|---|---|
| F701 to F704 | Analog channel power transformers T101 thru T104 |
| F709 | Control transformer T109 which supplies power for the +5V and +28Vdc power supplies. |
| F111 | Ink solenoid |

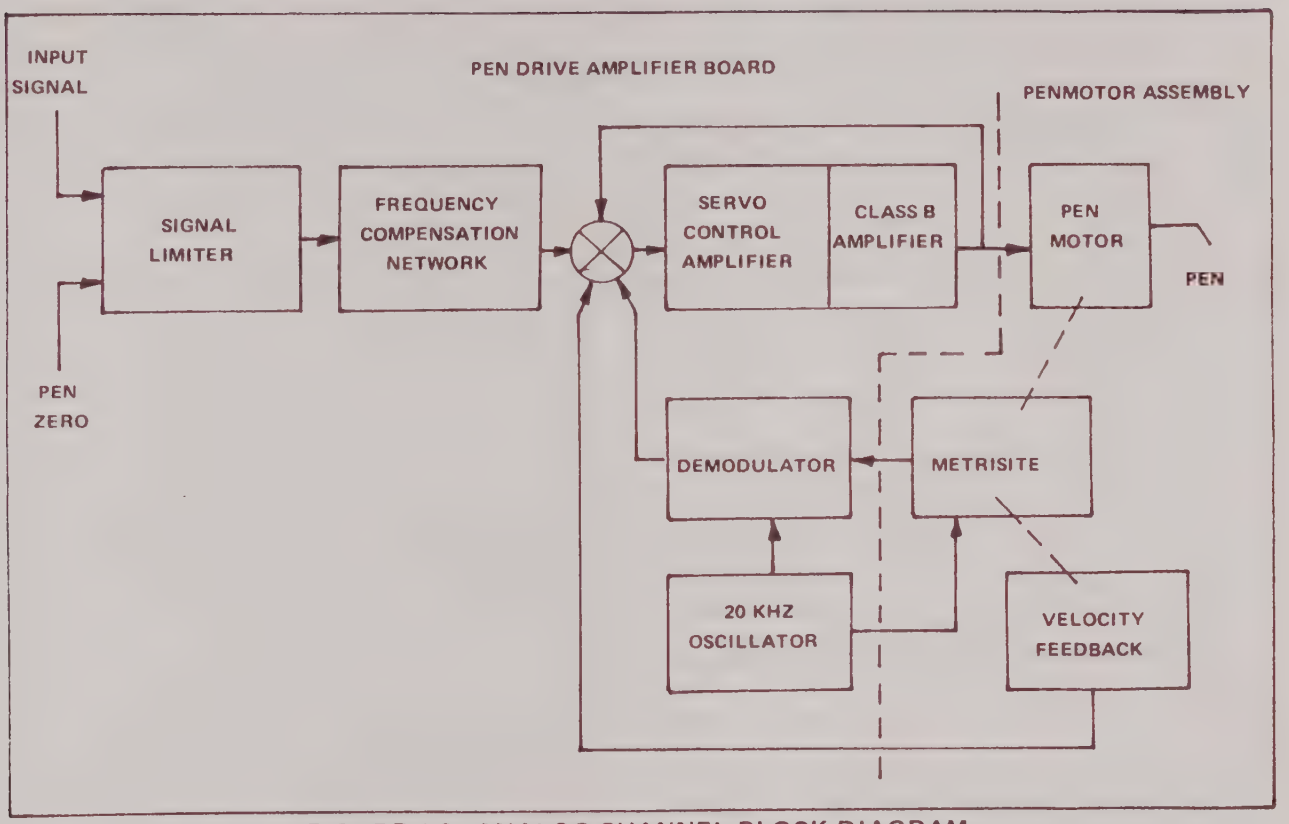


FIGURE 4-2 ANALOG CHANNEL BLOCK DIAGRAM

Microstepping is a method of achieving much smaller steps electrically. No gear trains are needed. The concept of microstepping is not new; however, the advent of microprocessors, inexpensive memory, and sophisticated analog integrated circuits have only recently made it a practical and viable alternative.

Classical full stepping of a four-phase stepper motor is accomplished by driving the four phases with four switches each 90° apart electrically. This is demonstrated graphically in Figure 4-3.

The vertical axis represents motor current in each of the four windings, and the horizontal axis represents time. A step occurs at each transition of any coil. The current waveforms are four symmetrical, unipolar square waves in a full quadrature relationship to one another. For a standard 1.8° motor of the type used in the 2000, each step represents 1.8° of angular motion, giving 200 steps per motor revolution.

To achieve microstepping, each of the current waveforms is changed to half-wave rectified sines maintaining the quadrature relationship as shown in Figure 4-4.

If the sine waves are truly continuous, no stepping occurs at all. The motor moves like a 200-pole synchronous motor. Achieving continuous sine waves which maintain an exact quadrature relationship independent of frequency is not practical. However, it is practical to generate sine waves digitally using an digital to analog converter and a ROM based look-up table. This will divide the sine waves into small discrete steps. The motor will then step, but the steps will be much smaller than normal full steps. In fact, the microsteps will be equal to one full step divided by the number of increments in each quarter cycle of the sine wave, and they will be of equal size.

The 2400S uses this technique. Each quarter cycle is divided into 16 increments, giving 16 equal microsteps per normal full-step, or 200 x 16 = 3200 microsteps per revolution. Each microstep then will give a rotation of approximately .11° instead of the normal 1.8°. The waveforms of motor current will be as in Figure 4-5.

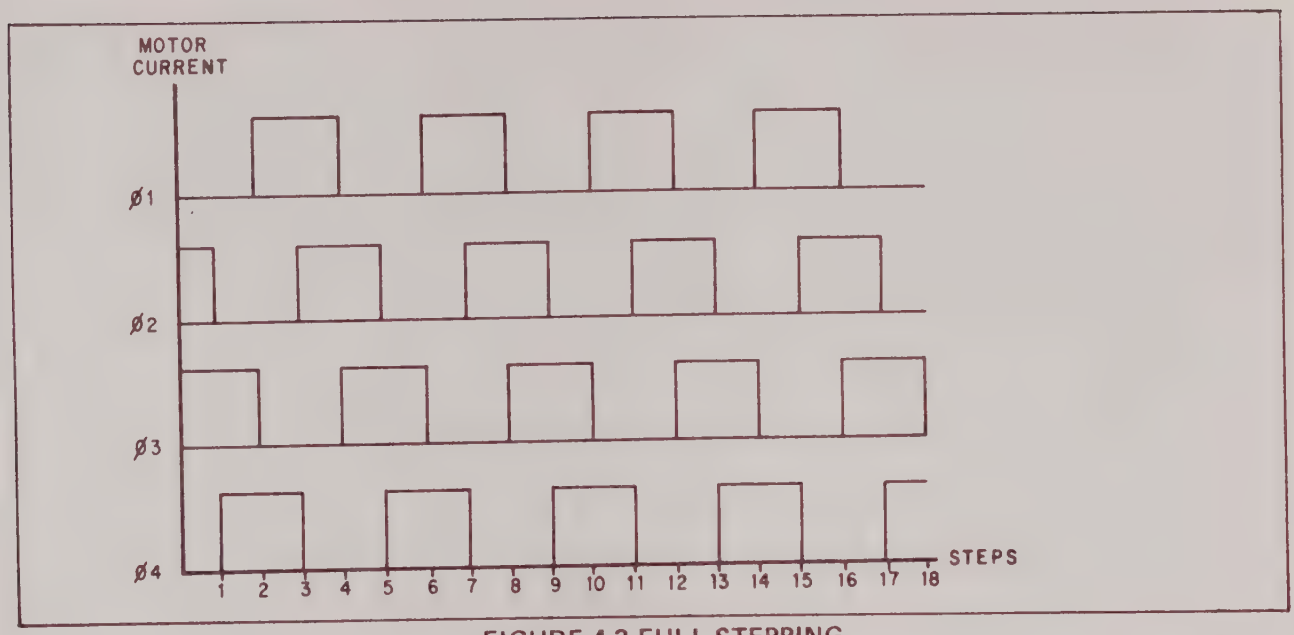


FIGURE 4-3 FULL STEPPING

## 4.5 STEPPER SYSTEM DESCRIPTION

The microstepping chart drive is implemented with an MPS 6502 microprocessor. The electronics resides on 6 printed circuit boards:

1. **Processor Board** - contains the processor system and the majority of the control electronics.

2. **Switching Amplifier Board** - contains the pulse width modulated power amplifier which actually drives the motor.

3. **Control/Timer Board 2000 Series Control Board** - contains event marker circuits, fuses and event marker timer.

4. **Power Supply Board** - contains system power supply voltages.

5. **Encoder Board** - contains optical sensor to verify chart motion.

6. **Speed Selector Board** - contains speed switches and remote interface.

7. **Software** - although the software resides on the chart control board, it will be treated as a functional block itself.

## 4.6 BLOCK DIAGRAM (STEPPER SYSTEM)

Refer to Figure 4-6.

System functions are determined by the processor system (1). The chart speeds are selected by the speed selector board (2), or the remote interface if enabled (3). The speed selector board puts out a 4 bit code which is read by the processor. The processor then monitors the step clock (4) to determine when a step should be taken. When it is time for a step, the processor updates the output to the amplifier (5) which drives the motor (8). If the speed selected was 200mm/sec., the processor will also monitor the motion detector (7) to insure that the chart is actually moving. A 10Hz signal is outputed to the event marker timer (6). This is derived from the master clock crystal (4MHz).

## 4.7 PROCESSOR BOARD (Refer to Schematic 293617)

The circuitry on the processor board is partitioned into several functional blocks. Each block can be discussed independently.

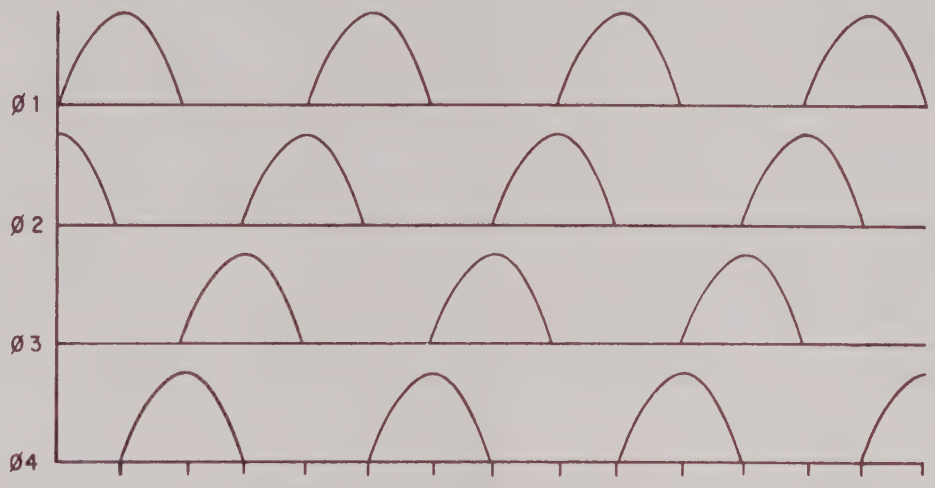


FIGURE 4-4 MICROSTEPPING

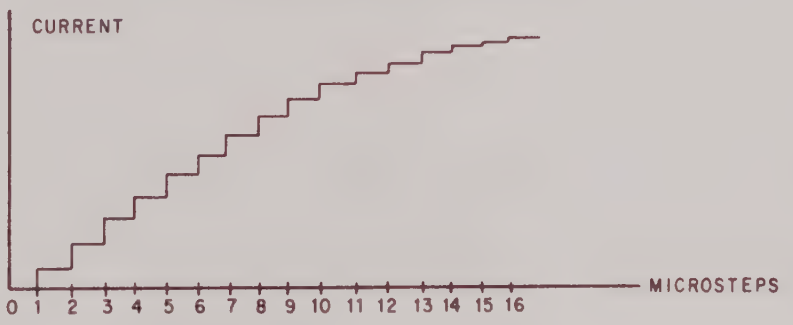


FIGURE 4-5 NORMALIZED PHASE CURRENT - 16 MICROSTEPS

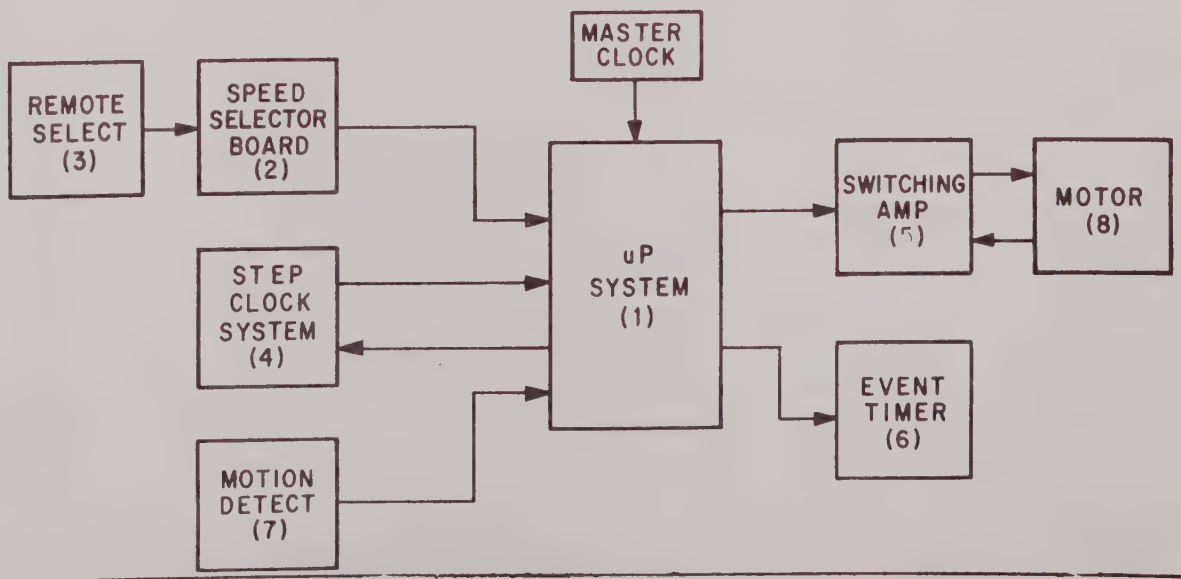


FIGURE 4-6 BLOCK DIAGRAM (OVERALL SYSTEM)

Processor System - the processor system consists of the microprocessor chip itself (U427), the scratch pad RAM (U429), the prom (U430), and the address decoders (U420, U415). The processor is the MPS 6502. U420 decodes the addresses for the RAM, ROM and I/O ports. Some I/O addresses are further decoded by U415. The enable pins on U420 (Pins 2 and 14) are driven by the $\emptyset_2$ clock. In this way, all address strobes are properly synchronized for read/write operations without the need for further gating.

All addresses referred to are assumed to be hexadecimal for the purposes of this discussion. Hexadecimal numbers will be proceeded with '$'.

The RAM (U429) is divided into two independent halves. Addresses $0000 thru $003F are scratch pad locations used by the program. Locations $0140 thru $017F are the system stack. The two are separated by ignoring address bits A6 and A7, and using address bit A8 instead.

The prom (U430) is decoded at address $7000-$73FF. Since address bit 15 is ignored, addresses $F000-$FFFF will also select the prom, allowing the processor to fetch its vectors for reset, NMI, and IRQ. (See 6502 Processor manual for details).

The main I/O address decoder (U415) is divided into two halves. The high order select lines (pins 1 and 15) are wired to the R/W line. The two low order select lines (pins 3, 13) are wired to bits A0 and A1. The enables (pins 2, 14) are wired to address $1000 (U420 pin 10). This chip decodes 8 port addresses, 4 of which are read only and 4 of which are write only. The exact port addresses and their functions are listed below:

| ADR | U415 Pin No. | Function |
|---|---|---|
| $1000R | 7 | DO-Stop Switch D6-External Pulse D7-Step Clock |
| $1000W | 9 | Sine Data to Motor-D0-D6 D7-Sin Gate to Motor |
| $1001R | 6 | D7-2X Step Clock D0-D6 Not Used |
| $1001W | 10 | Cosine Data to Motor D0-D6 D7 COS Gate to Motor |
| $1002R | 5 | D7-NMI Bit D0-D6 - Not Used |
| $1002W | 11 | D0-D3 - Output Speed Select Code (See 3.1.4) D4-D7 Not Used |
| $1003R | 4 | D0-D7- Step Clock Period Counter to LO BYTE (See 3.1.3) |
| $1003W | 12 | DO-D7 - Output to Step Clock Adjust DAC (U423) |

I/O Functions decoded by U420 are as follows:

| ADR | U420 Pin NO | Function |
|---|---|---|
| $2000 | 11 | DO, D1-HI - BYTE of step clock period counter. (See 3.1.3) |
| $3000 | 12 | D0-D7 Freq. Ref. Input Switch |
| $4000 | 7 | D7-Cal Switch D0-D6 Not Used |
| $5000 | 6 | Strobe used only; D0-D7 Not Used. Accelerates step clock. |
| $6000 | 5 | Available on socket XU430 for diagnostics |

NOTE: **All of the above except address $6000 are read - only locations. The detailed operation of the processor will be explained in the following sections.**

### 4.7.1 Step Clock System

The Step Clock is used to synchronize the chart speeds. The clock runs at the maximum stepping frequency (approx. 16KHz). All speeds are generated by counting step clocks.

The step clock system consists of U404, U409, U423 and half of U424, and associated discrete components. The clock is generated by U404, an LM331 voltage to frequency converter. Pin 7 of U404 is the input voltage control signal. U409 pin 6 is the summing point which builds this voltage. The reference voltage comes thru R406 from the variable speed pot and the 5V power supply. In addition, the processor is able to adjust this voltage, and therefore the clock frequency by writing data to U423, a digital to analog converter. This adjusting voltage appears at TP-1, and is scaled by R420, R416, and R414 so that a 1 LSB change on U423 gives no more than a 1 LSB change in frequency. The mechanics of this exchange will be explained in greater detail in the software section.

### 4.7.2 Step Clock Period Counter

This is actually part of the step clock system. The step clock period counter allows the processor to measure the step clock period using the 4MHz crystal as a reference. Then, if the period is incorrect due to time or temperature drift, the processor can adjust it using U423.

The counter consists of U411, U412, and U421. The processor reads the counter using U422 and U416 period latches to read the 10 bits of data.

The step clock appears on U411.3 and is divided by 2 by U411. The 4MHz oscillator is gated into the counter at U412.1. When U412.2 goes high, counting begins. U421 accumulates 4MHz clocks and overflows into U411.11. When U412.2 falls, counting stops, and the final count is latched into U422 and U416 by U411.6. One half step clock cycle later, U412.8 clears counters U421 and U411.13, and one half step clock cycle after that the process begins again. The processor reads the period by enabling address $1003R. This strobes U422.1 low, enabling the tri-state buffers in the latch. The processor then reads address $2000 to read the two hi order bits of the counter from U416.5 and U416.9 thru tri-state buffers U417.3 and U417.6, respectively.

Using this process, the data in the latches is always valid, and it is not necessary to check any status bits to determine when it is safe to read the counter.

At each transition of the step clock/2 signal, the processor determines whether or not to take a step. If it decides not to step, it then reads the step clock period, as above. If the step clock period is low, indicating the frequency is too high, the processor decrements U423 to bring it back down. If the period is high, U423 is incremented to bring the frequency up.

The correct period is determined by the processor and the step clock cal. reference switch (U238, S401). When the stop button is pressed, the processor reads the switch, and adds its value to hex $0170 to build the reference period. This gives a range of $0170 to $026F giving a period of 46 to 77.8 USEC. The nominal period (switch setting $80) is 62 usec. In this manner, the chart speeds can be trimmed to compensate for mechanical errors.

### 4.7.3 Speed Selector

The Speed Selector consists of U419 and U414. U419 is a 74LS95 shift register used as a quad latch output port. U414 is a 74LS85 quad magnitude comparator. The chart speed select codes come from the switch board and appear on U414 pins 1, 14, 11, and 9. If the code on the output port is different from that on the switches, the A=B output (pin 6) of U414 will go low. This pin is connected directly to the non-maskable interrupt ($\overline{NMI}$) line of the processor U427 pin 6. A high to low transition on this pin causes an interrupt to the processor. The processor then abandons whatever it is doing and searches for the proper code to make $\overline{NMI}$ go high (it can read $\overline{NMI}$ thru U410.3). When it finds the code, it decodes it into a speed and then executes the new speed. See Table 4-2 for speed codes. The enable input (U414 pins 3, 4, 5) must be high or $\overline{NMI}$ cannot go high. This signal is brought low for either stop or interlock conditions. The strobe signal (J403-6) is used by the pen heat control circuit on the thermal unit to determine chart speed and set the proper pen heat.

CHART DRIVE SPEED CODES

TABLE 4-2

| L101 (D3) | L102 (D2) | L103 (D1) | L104 (D0) | SPEED (MM/SEC) |
|---|---|---|---|---|
| 0 | 0 | 0 | 0 | STOP |
| 0 | 0 | 0 | 1 | .05 |
| 0 | 0 | 1 | 0 | .1 |
| 0 | 0 | 1 | 1 | EXT. |
| 0 | 1 | 0 | 0 | .25 |
| 0 | 1 | 0 | 1 | .5 |
| 0 | 1 | 1 | 0 | 1 |
| 0 | 1 | 1 | 1 | 2 |
| 1 | 0 | 0 | 0 | STOP |
| 1 | 0 | 0 | 1 | 5 |
| 1 | 0 | 1 | 0 | 10 |
| 1 | 0 | 1 | 1 | EXT. |
| 1 | 1 | 0 | 0 | 25 |
| 1 | 1 | 0 | 1 | 50 |
| 1 | 1 | 1 | 0 | 100 |
| 1 | 1 | 1 | 1 | 200 |

### 4.7.4 Motor Drive Outputs

The motor drive outputs come from U418, U425, and U426. U425 and U426 are DAC's which the processor uses to generate the sin and COS signals for the switching amplifier. The code is 7 bit binary. Bit 0 (LSB) of the DAC is grounded (logical 0). The 8th bit is latched by the two halves of U418 to provide the sin gate and COS gate. The sin and COS signals are full wave rectified. The two gate signals direct the sin and COS to the proper motor coil. All 4 signals come from a look-up table in the ROM.

### 4.7.5 Chart Motion Detection

This section consists of U408 and U403. An optical detector (U402) is set up to give 8 pulses per motor revolution. These pulses are synchronized to step clock by U403. U403 is an NE555 timer wired in the retriggerable mode The time constant is about 150msec. as long as encoder pulses arrive at a sufficient rate to keep the timer triggered, the output on U403-3 will be high. If pulses stop arriving, the 555 times out and U403-3 drops low causing an $\overline{IRQ}$ interrupt to the processor. This interrupt is masked by the software so that it is ignored by the processor for any speed except 200mm/sec. At this speed, however, the chart must be accelerated gradually. If the chart should stop for any reason, the $\overline{IRQ}$ informs the processor to re-accelerate. It does this by shorting C404, which then charges again exponentially, causing the control voltage on the VCO to do the same. The signal that shorts C404 also retriggers U403, allowing 150msec for the chart to build up enough speed to keep $\overline{IRQ}$ high.

### 4.7.6 Power On/Failsafe Reset

This circuit consists of U401A. The power-on reset is generated by CR405, R402, and C403 thru pin 4 of U401A. The failsafe reset is triggered by address bit 15 at U401A-12. If for any reason (line noise particularly) the processor should "bomb", its characteristic mode of failure is to go to address $FFFF and halt. This causes A15 to be high. If this occurs for more than one step clock period (62 μsec.) step clock will set U401A-9. On the next positive transition of step clock, U401A-6 will go low causing a failsafe reset which will re-start the processor. The effect on the chart is a momentary interruption, or 'Hiccup', however, no catastrophic failure will occur (i.e. chart will not stop for good).

### 4.7.7 Switching Amplifier Board (Refer to schematic 293618)

The switching amplifier board delivers the analog sine waves to the motor to make it move. This is a unipolar pulsewidth modulated amplifier with four outputs - one for each coil. This board consists of four sections - the sawtooth generator, the error amplifier, the pulse width modulator, and the power section.

The basic theory is to modulate the current in the motor coil by driving it with pulses of constant amplitude and frequency and varying pulse width or duty cycle. This allows an analog current waveform in the motor without the heat generated by an analog power amplifier.

### 4.7.8 Sawtooth Generator

This section consists of current source U501 pins 1, 2 and 3, Q509 and R503; and voltage comparator U502 pins 9, 8 and 14, Q510, and Q511. The current source develops a constant current at the collector of Q509 of approximately 1.88ma causing C503 to charge in a linear fashion. When the voltage across C503 reaches the reference voltage of the current source (approx. 10V) U502-14 will switch high causing Q510 to short out C503 bringing the voltage toward zero. U502-14 also turns on Q511 causing the voltage at U502-8 to drop to 0V + 1 diode drop. When C503 gets lower than U502-8, U502-14 switches low again allowing C503 to recharge. The net result is a linear sawtooth signal at about 10V peak and about a 20KHz rate. This sawtooth is the reference for the pulse width modulator.

### 4.7.9 Pulse Width Modulator and Error Amplifier

There are two pulse width modulators and two error amplifiers — one for coils Ø 1 and Ø3 and one for coils Ø 2 and Ø 4. The error amplifiers compute the difference between the input voltage and the output current as sensed at R558 and R531, and send the error signals to U502-11 and U502-5, respectively. U502 is a quad voltage comparator. The reference signal appears at U502-10 and U502-4 respectively. Since the operation of both circuits is identical, only one will be described.

When the sawtooth reference drops to 0 volts, the input at pin 11 of U502 is greater than pin 10, and the output at U502-13 goes high, turning on the output transistor Q501 or Q503. This situation continues until the ramp reaches the voltage at U502-11. U502-13 then goes low, turning the output off again. Since the ramp is linear, the amount of time the output is on will be proportional to the size of the error signal, thus giving the pulsewidth modulation.

## 4.8 POWER SECTION

The power section is constructed in two halves — one half drives coils Ø 1 and Ø 3, and the other drives Ø 2 and Ø 4. Since both halves are identical only Ø 1 and Ø 3 will be discussed.

The pulse width modulated input is that of a full-wave rectified sine, and the cycles alternate between Ø 1 and Ø3. The sin gate determines which phase is driven on a given cycle. If sin gate is high U503.7 is low turning off U506.1, and allowing the PWM signal to drive U505.1 and, ultimately Q501 or Ø 1. U503.14 will be off turning on U506.14 and shorting PWM to U505.14 turning Q3 and Ø 3 off. Furthermore, U504.1 will be on turning U505.7 on which turns Q502 on and puts catch diode D505 in the circuit. This diode swallows the inductive transients from the motor winding and must be present when the coil is driven. However, coils Ø1 and Ø3 form A 1:1 transformer so the catch diode must be disconnected when the coil is not driven or a current path exists for induced current causing heating and loss of power in the motor. This is the function of Q502 and Q504.

Operation of the circuit is swapped when sin gate is low, i.e. Q503 and Q504 are on and Q501 and 502 are off.

### 4.8.1 Control/Timer Board (Refer to schematic 294131)

This board provides fusing for the system. It is also responsible for turning the ink solenoid, the drive amplifiers, and the event markers on and off. This is accomplished thru relay K701. The relay common is interrupted if the stop button is depressed, or if the interlock lamp is on (paper out). This opens the relay, and pins 7, 8 open the event marker ground. This ground is also used by the optoisolators on the drive amplifiers to enable the output stages. Pins 4 and 5 of K701 interrupt ac to the ink solenoid.

The event marker timer is formed by U101, U102, U103, U104 and S101. This circuit is simply a counter chain giving various repetition rates depending on which of the six switches in S101 is closed. The settings are as in Table 4-3.

TABLE 4-3

| REPETITION RATE | SETTINGS SW ON | SW OFF |
|---|---|---|
| .1 SECOND | 1, 3 | 2, 4, 5, 6, 7, 8 |
| 1 SECOND | 1, 4 | 2, 3, 5, 6, 7, 8 |
| 10 SECOND | 1, 5 | 2, 3, 4, 6, 7, 8 |
| 100 SECOND | 1, 6 | 2, 3, 4, 5, 7, 8 |
| .01 MINUTE | 2, 3 | 1, 4, 5, 6, 7, 8 |
| .1 MINUTE | 2, 4 | 1, 3, 5, 6, 7, 8 |
| 1 MINUTE | 2, 5 | 1, 3, 4, 6, 7, 8 |
| 10 MINUTE | 2, 6 | 1, 3, 4, 5, 7, 8 |

### 4.8.2 Power Supply Board (Refer to schematic 293619)

The power supply board generates the voltages used by the chart drive system. The voltages are:

1. +22V unregulated @ 8a
2. +5V regulated @ 600ma
3. −5V regulated @ 20ma
4. +12V regulated @ 20ma
5. +15V regulated @ 70ma
6. −15V regulated @ 80ma

There is also a relay to interrupt the +5V and +22V if a paper out condition occurs. (K301)

### 4.8.3 Optical Sensor Board (Refer to schematic 294133)

The optical sensor board provides gross motion detection to the processor. The motor damper has eight non-reflective lines on it. The optical sensor monitors these lines, and outputs a pulse from its buffer transistor each time one is detected. If they arrive at too low a rate, the logic on the chart control board will interrupt the processor. This interrupt is ignored unless the selected chart speed is 200mm/sec.

### 4.8.4 Speed Selector (Refer to schematic 293620)

The switchboard contains the speed selection logic. The two multiplexers on the board (74LS157) select either the front panel switches, or the rear panel remote connector.

The select line for the mux is high for local and low for remote, and is driven from the rear panel. The four signals L101, L102, L103, L104 are the chart speed code. The code is listed in Table 4-4.

TABLE 4-4 REMOTE SPEED CODES
LOGIC 0 = 0V LOGIC 1 = 5V

| L102 | L102 | L103 | L104 | SPEED |
|---|---|---|---|---|
| 0 | 0 | 0 | 0 | STOP |
| 0 | 0 | 0 | 1 | .05MM/SEC. |
| 0 | 0 | 1 | 0 | .1MM/SEC. |
| 0 | 0 | 1 | 1 | EXT. PULSE (See Note 1) |
| 0 | 1 | 0 | 0 | .25MM/SEC. |
| 0 | 1 | 0 | 1 | .5MM/SEC. |
| 0 | 1 | 1 | 0 | 1MM/SEC. |
| 0 | 1 | 1 | 1 | 2MM/SEC. |
| 1 | 0 | 0 | 0 | STOP |
| 1 | 0 | 0 | 1 | 5MM/SEC. |
| 1 | 0 | 1 | 0 | 10MM/SEC. |
| 1 | 0 | 1 | 1 | EXT. PULSE |
| 1 | 1 | 0 | 0 | 25MM/SEC. |
| 1 | 1 | 0 | 1 | 500MM/SEC. |
| 1 | 1 | 1 | 0 | 100MM/SEC. |
| 1 | 1 | 1 | 1 | 200MM/SEC. |

**NOTE 1: Code 0011 corresponds to ext. ÷ 100. This code could possibly be given special functions on an NSP basis.**

The stop signal (pin 19) is used by the chart control board to generate a reset to the processor. In local mode, it comes from the stop switch thru U604 pin 3. In remote it comes from U601-6 when the proper code for stop is present on $\overline{S2}$, $\overline{S3}$ and $\overline{S4}$. The relay signal (pin 14) turns on relay K701 on the control board. If Q602 is off, the relay is off, interrupting the event marker ground and turning off the drive amplifiers and ink solenoid. Thus Q602 is turned off by either a stop condition, paper out condition, removal of the remote link, or grounding the stop pin (pin C). In local mode, the stop condition is sensed thru U604-13 from the stop switch. In remote, it is thru U601-8 in conjunction with U601-6. The enable signal (pin 5) controls the magnitude comparator on the chart control board. If a paper out condition occurs, K701 on the control timer board opens, interrupting the event marker ground (pin 6) and allowing Q601 to turn on and ground enable. The processor then is unable to find a speed, and the chart stops.

### 4.8.5 Thermal Writing

The thermal writing recorders also have a pen heat control circuit. The purpose of this circuit is to heat the pens proportionally with chart speed, giving more even trace density.

The strobe out signal (U607-3) is integrated by R634 and C606. Since this signal is a pulse of constant width and varying frequency, the dc voltage at C606 will be proportional to the frequency of strobe out and therefore to chart speed.

The ac ref. signals (pins y and z) are rectified by CR607. The comparator U606 will give a negative pulse out whenever the rectified ac ref. approaches ov. The result is a 120Hz pulse train synchronized to the ac line. When this pulse is low Q605 turns on shorting C605 to +15V. When the pulse goes back high C605 begins to charge toward −15V at a rate determined by R631, generating a negative-going ramp. When the value of this ramp as seen at comparator U606-10 is less than the integrated chart speed voltage at U606-11, U606-13 will go high. The leading edge of this pulse is passed to Q607 by C607 turning on opto-isolator U605. This in turn turns on Q604 causing gate current to flow in trial Q606. Q606 turns ov, causing ac current to flow in the pen heat transformers.

### 4.8.6 Software

The system software is broken up into three basic modules:

Speed decode/select, speed generation and step clock frequency tracking. The latter two modules are active concurrently and the former is active only when a speed change occurs or when the recorder is stopped.

The starting address of the software is $7000. (Refer to flow charts)

### 4.8.7 Speed Select/Decode

All the chart speeds are selected by counting the step clock/2 signal. The speed decode software reads the speed code, and converts it into an index. It then reads from ROM the number of step clocks to ignore before taking a step using the index as a pointer to a look up table. These values are stored in two locations of scratch pad RAM for use by the speed generation routines (locations factl and consth, constl). Refer to Figure 4-7 flow chart for operation of this module.

Whenever the speed is changed, the hardware generates an interrupt. (NMI on Figure 4-7). The processor outputs a 0000 to U419 and checks the $\overline{NMI}$ to see if that is the right code. If it is, it goes to the decode routine flow chart, Fig. 4-8). If it is not, it increments the code on U419 and checks again. This process repeats until the correct code is found, or until all possibilities are exhausted. In the latter case, the processor returns to the stop routine (point (A) Figure 4-7). Here, the frequency is checked. If $\overline{NMI}$ is still true the processor returns to the switch decode routine, and repeats the entire process. This will happen if the enable line is 0, which occurs for stop, remote link out, remote stop true, or interlock.

The speed decoder (Figure 4-8 point (B)), uses the switch setting established by U419 to generate the correct speed. The speed code is put in the index register. This number is decremented and multiplied by 2 to give a compact, efficient structure to the speed look up table. The index register is now the pointer to this table. The processor fetches the correct speed constants from the table using an indexed load, and stores them twice in RAM. Each constant is two BYTES and represents the number of step clocks to count before stepping. One constant is decremented to zero by the speed routine and the second restores the first.

Certain speeds are handled as special cases, and these are shown at the end of Figure 4-8.

At this point, the constants have already been loaded, so the index register has been incremented once from its original number. If it contains a $5 or $15, this indicates that the external step mode is to be enabled. If it contains a $18, the speed is 100mm/sec, which is a special loop. If it contains a $10, the speed is 200mm/sec. which is a special loop. If it contains a number greater than $10, the code is invalid, and we return to the stop routine, and eventually attempt to re-decode it. If none of the above is true, the speed is between .05 and 50mm/sec and we go to the general speed loop (Figure 4-9, point (F).

### 4.8.8 Speed Loops

1. General Speed Loop (Flow Chart, Figure 4-9)

   For this loop, the Y index register holds the lo-order BYTE of the speed constant, and the hi-order BYTE is in memory. The processor waits for step clock to go low. When it does,

the Y register is decremented and compared to zero. If it is not zero, the processor goes to the frequency check subroutine (point G, Figure 4-9), and then returns to wait for step clock to go high again.

If Y was zero, the processor decrements the order BYTE of speed constant and compares it to zero. If it is not zero, as above we check the frequency and repeat.

If hi-BYTE is zero, then the processor steps the motor, and restores hi and lo BYTE constants.

To take a step, the processor must update the sin and cos signals on U425 and U426 respectively. The sin and cos lookup tables are interleaved in a 256 BYTE section of memory. Using the index register x as a pointer, the processor fetches the data with an indexed load.

2. 100mm/sec Speed Loop

This loop operates like the general loop except that a step is taken on each hi to lo transition of step clock. This eliminates the requirement for counting clocks and comparing counts, giving the processor sufficient time to adjust frequency at every step.

3. 200mm/sec Loop

This loop is as above, except that at every hi to lo transition the processor advances two entries through the sin/cos look up table, reducing the micro steps to 8 and effectively doubling the motor speed.

4. External Loop

This loop steps the motor at each hi to lo transition of the external input. Frequency is not checked or adjusted.

### 4.8.9 Frequency Adjust Routine (flow chart Figure 4-10)

The frequency adjust routine allows the processor to monitor the step clock frequency and adjust it to eliminate time or temperature drift. This routine uses the period counter and the freq. adjust dac (U423). The lop also effectively averages readings to compensate for noise and to prevent oscillations about the center frequency.

First, the processor checks the switch on the variable speed pot. If this is open, the recorder is in variable speed mode and nothing else is done; the processor returns.

If the switch is closed, the frequency is adjusted. The adjustment dac is 8 bits wide, however the processor maintains a 16 bit number to control it. Only the 8 most significant bits actually go out to the dac. The low order 8 bits are initialized to $80.

The processor then reads the period counter's hi BYTE and compares it with the hi BYTE of the period reference established the last time the stop button was hit. If the two are equal, then the period counter's lo BYTE is read and compared to the period reference lo BYTE. In either case if an inequality occur the direction of inequality is established. If the frequency is hi, the DAC must be decremented. If it is lo, the DAC must be incremented.

Both the increment and decrement routines work the same way, so only the increment routine will be discussed.

First, the low BYTE of DAC is incremented. If this generates a carry (i.e. the register overflowed from $FF to $00), then the hi BYTE is incremented and output to the DAC. Also the low BYTE is re-initialized to $80. This way, the frequency must be in error 128 ($80) readings in a row in the same direction before the DAC actually changes. This gives a filtering effect which insures that the VCO is able to settle to its final value before it is changed again.

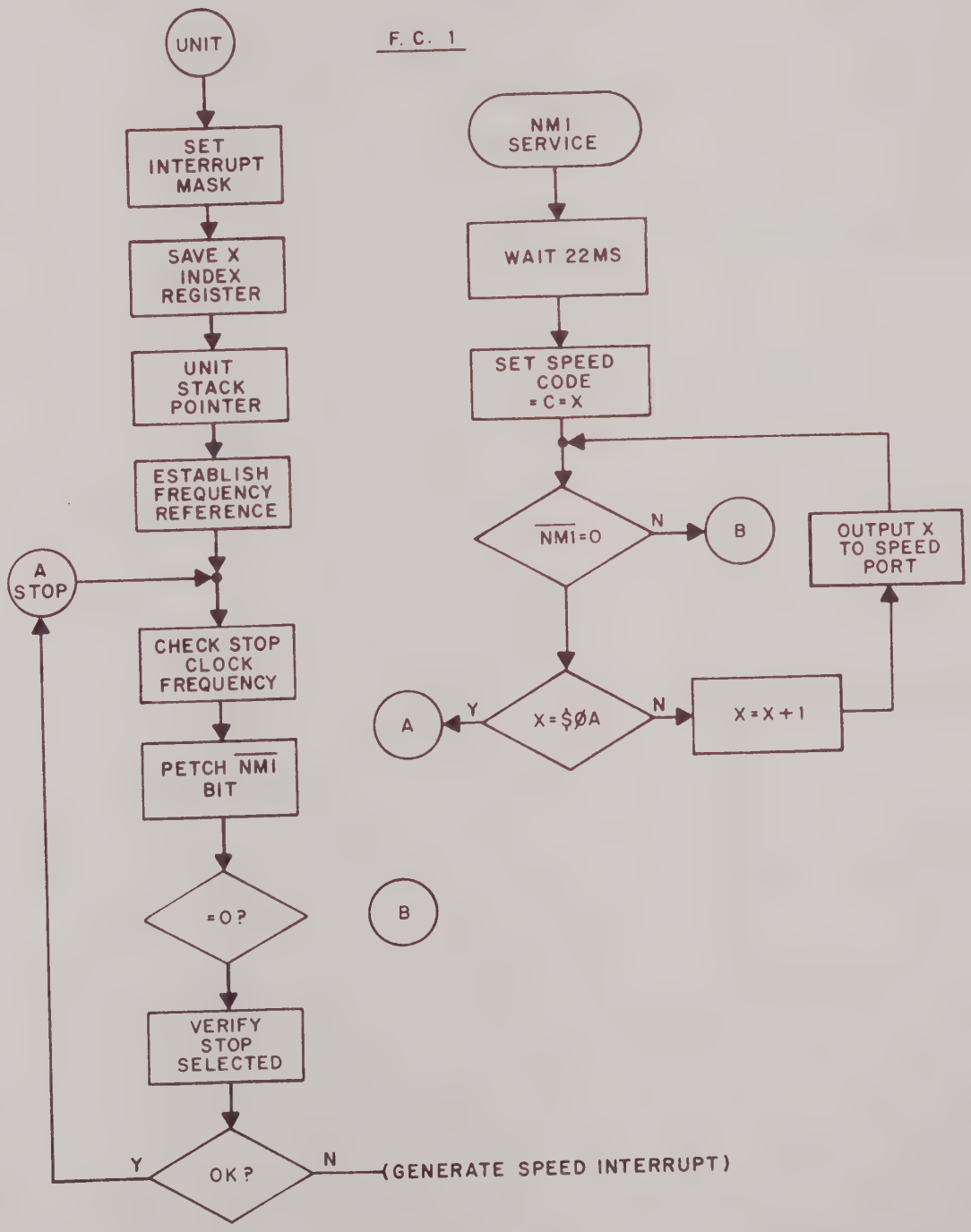


FIGURE 4-7 SPEED FLOW CHART

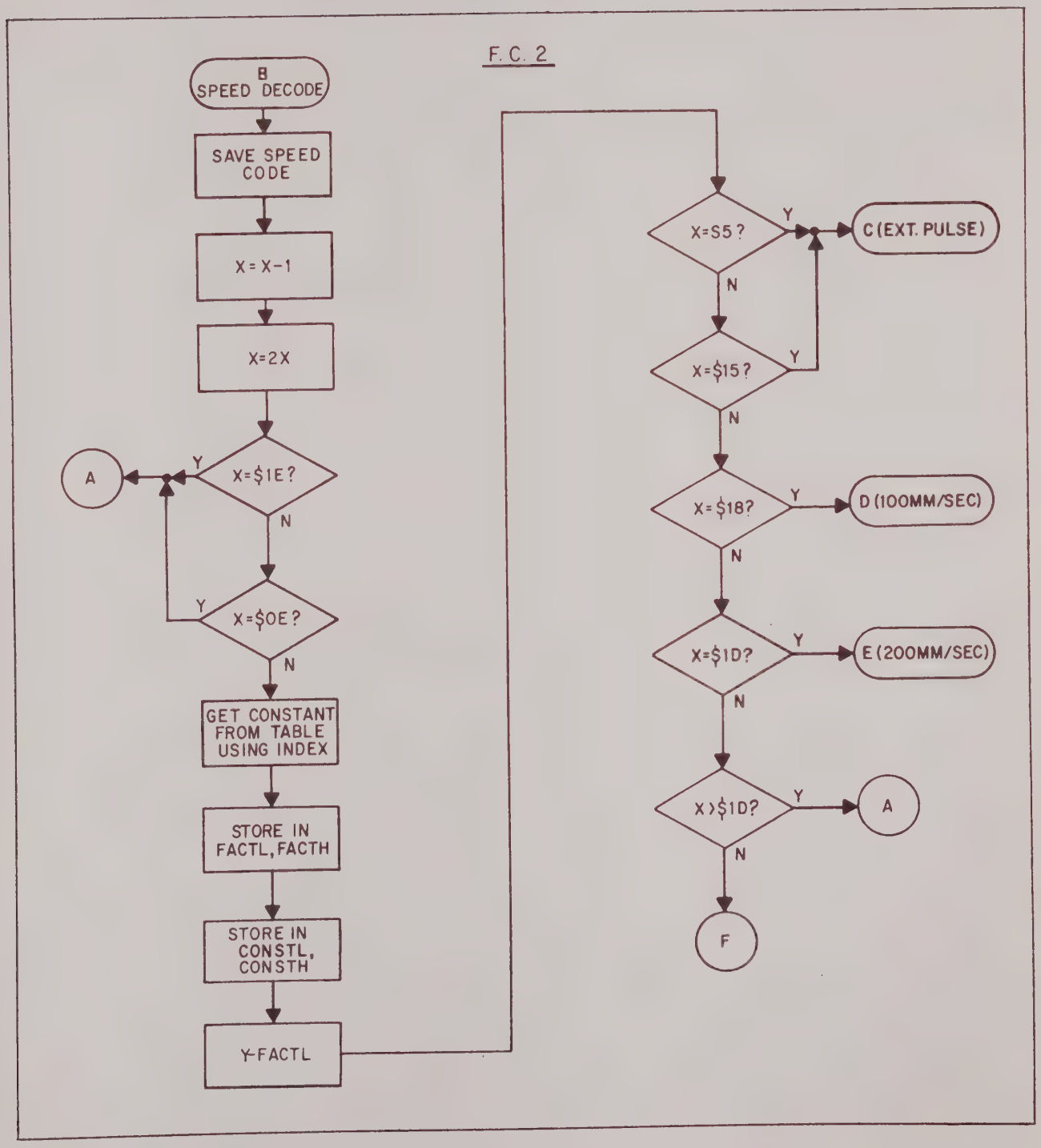


FIGURE 4-8 FLOW CHART DECODE ROUTINE

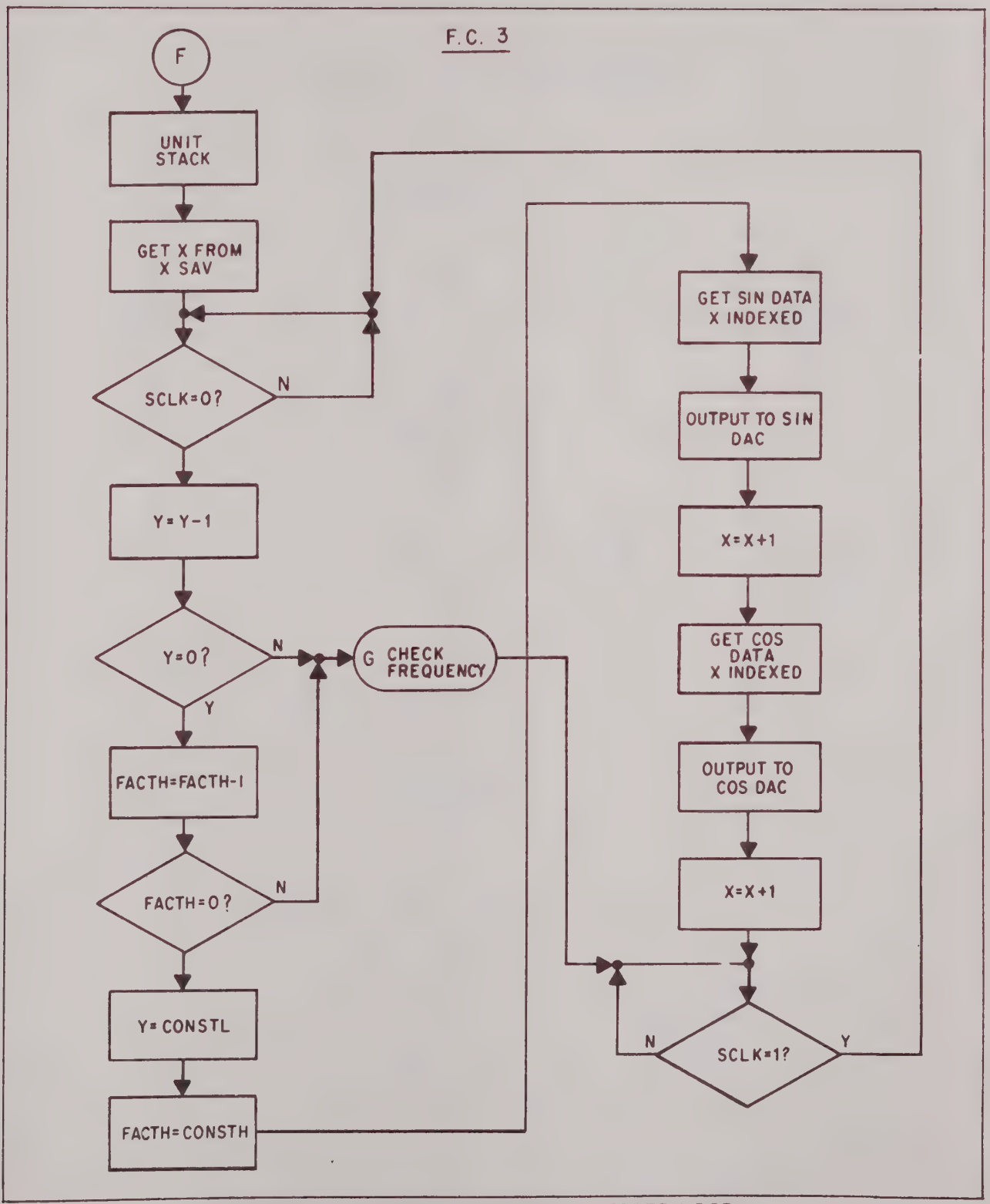


FIGURE 4-9 FLOW CHART GENERAL SPEED LOOP

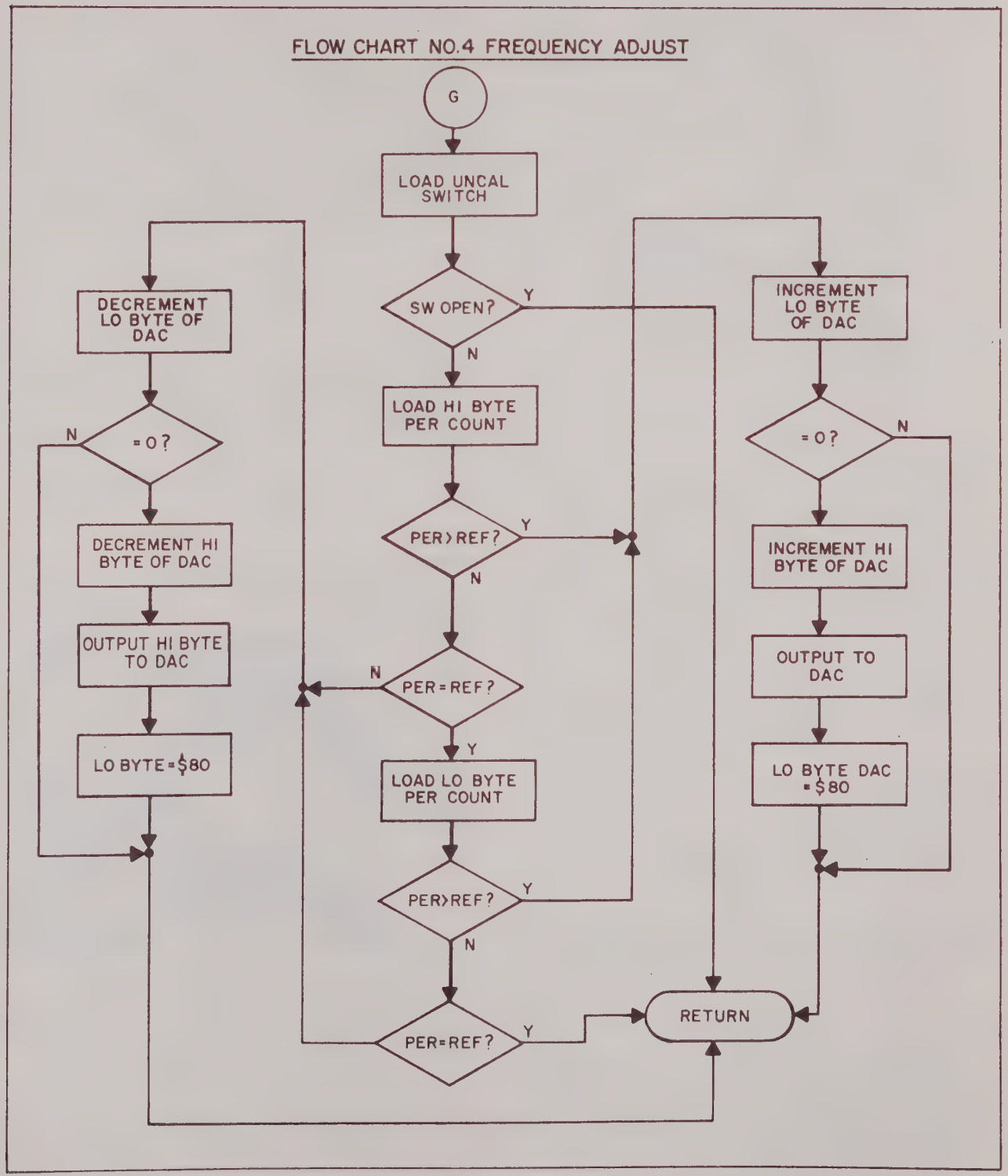


FIGURE 4-10 FLOW CHART FREQUENCY ADJUST ROUTINE

# SECTION V

# MAINTENANCE

## 5.1 INTRODUCTION

This section contains paragraphs describing operation maintenance, preventative maintenance, calibration, troubleshooting, and subassembly replacement. Operative maintenance generally refers to maintaining materials regularly consumed in operation, i.e., paper and ink. Preventative maintenance consists of cleaning, lubrication, and periodic inspection.

## 5.2 OPERATIVE MAINTENANCE

### 5.2.1 Chart Paper Replacement

*WARNING: BEFORE ATTEMPTING TO REPLACE CHART PAPER TURN POWER OFF AND DISCONNECT RECORDER FROM POWER SOURCE.*

1. Grasp pull bar (Figure 5-1) and open writing table.

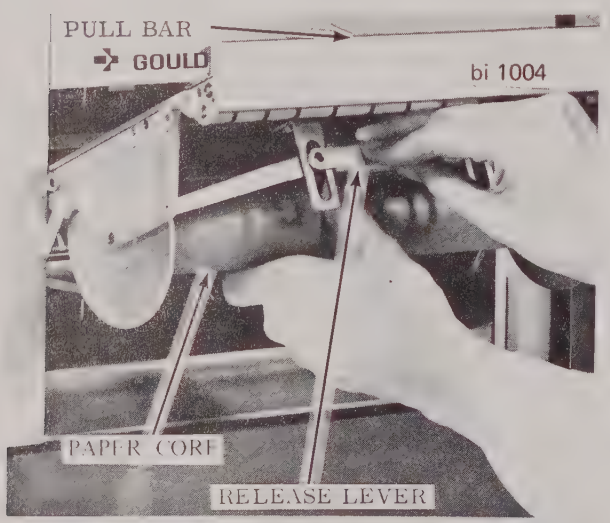


FIGURE 5-1 PAPER ROLL REMOVAL

2. Hold paper supply roll and pull down on paper supply release lever. Remove paper supply roll.

3. Unscrew right flange from paper supply roll. Remove and discard core (Figure 5-2).

4. Slide new paper roll onto supply shaft. Make sure notches in paper core align with guide pins on left flange and paper edge is facing forward and down.

5. Screw right flange onto supply shaft until it is snug against paper edge.

6. Insert paper roll into writing table assembly. Push release lever up to lock into position.

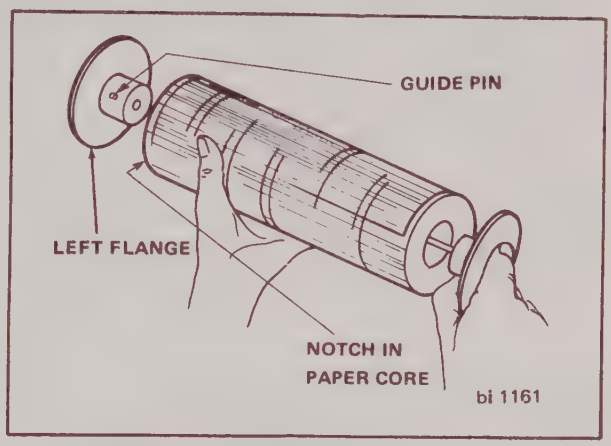


FIGURE 5-2 CHANGING CHART PAPER

*CAUTION: MAKE SURE SHAFT IS SEATED PROPERLY AND ROTATES FREELY. USE CARE WHEN THREADING PAPER SO NOT TO DAMAGE PENS.*

7. Refer to Figure 5-3. Feed paper over writing bar, down through slot between pull bar and drive roll, around pressure roll, and out to front of writing table assembly.

8. Slowly close writing table while gently pulling on chart paper. When friction resists rotation of paper roll, pull paper taut and center, and close writing table assembly. Make sure table is completely closed.

9. Turn recorder on and run out about two feet of chart paper at 100mm/sec to align on writing table.

### 5.2.2 Ink Cartridge Replacement

The ink supply, dependent on use, should be sufficient for about one year. When ink cartridge replacement becomes necessary, recorder must first be removed from its case in portable models or slid out of cabinet in rack mount models. To slide unit out of cabinet, remove 4 screws from panels along left and right front sides of recorder. Recorder will slide out of cabinet.

WARNING: THE INK PLUNGER ASSEMBLY CONTAINS A COMPRESSED SPRING WHICH COULD BE HAZARDOUS. DO NOT TAKE APART. USE CAUTION WHEN HANDLING.

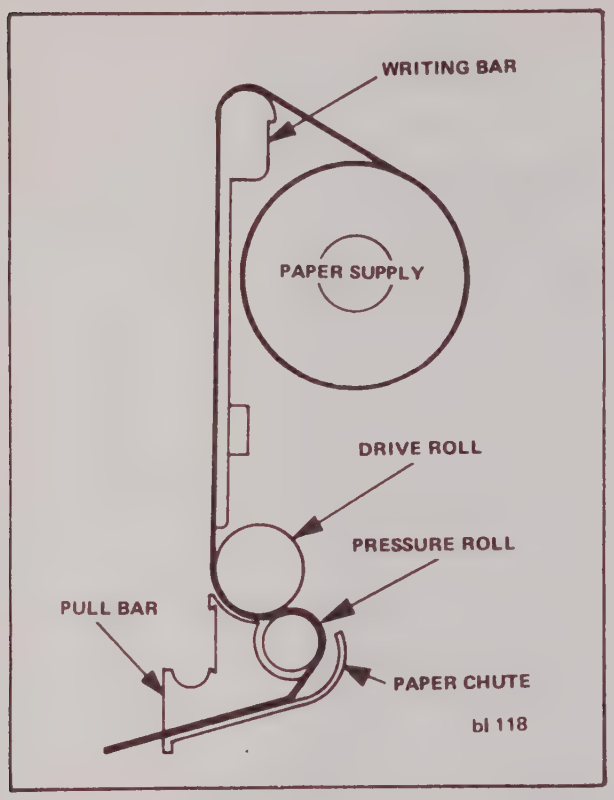


FIGURE 5-3 PAPER THREADING DIAGRAM

To remove recorder from case (portable models) and change the ink cartridge (portable or rack mount models) use the procedure that follows.

*CAUTION: EXERCISE CARE WHEN REMOVING RECORDER FROM CASE SO AS NOT TO DAMAGE PRINTED CIRCUIT BOARDS MOUNTED ON BOTH SIDEPLATES.*

1. Remove front and rear slide covers from top of case by sliding front cover toward front of recorder and rear cover toward rear of recorder.

2. If recorder is equipped with preamplifiers disconnect preamp cage connector from recorder connector. (See Figure 5-4 for location.)

3. Pull case handle up. Remove 2 screws directly over recorder.

4. Turn case on one side or back. Remove 5 screws from bottom of case directly under recorder.

5. Turn case upright. Slide recorder out from FRONT of case. Push from rear and/or pull from side plates. Do not pull from top front of recorder or chart take-up.

6. Ink cartridge is attached to ink plunger assembly located on back of recorder (See Figure 3-2).

7. Observe large hole or slot. Activating screw is located under hole. Turn screw clockwise until spring in ink plunger is drawn up tight.

8. Turn ink off at solenoid valve and slide bar on manifold. Follow direction of arrows.

9. Remove hardware holding ink plunger assembly to top bracket assembly (Figure 5 4). Carefully pull ink plunger assembly (with ink cartridge) straight up and out of recorder. Retain hardware.

10. Place paper towel under ink tubing where it is connected to bottom of ink cartridge. Carefully pull ink tubing off ink cartridge.

*CAUTION: DO NOT USE TOOLS WHICH COULD GOUGE OR CUT THE INK TUBING.*

11. Unscrew ink cartridge from plunger assembly and discard (Figure 5-5).

12. Remove piston retainer from replacement cartridge and discard (Figure 5-5).

13. Screw new ink cartridge onto ink plunger assembly and tighten firmly.

14. Remove shipping cap from ink cartridge and discard (Figure 5-5).

15. Install ink tube on ink cartridge.

16. Attach ink plunger assembly (with ink cartridge) to top bracket assembly with exiting hardware.

17. Turn activating screw counterclockwise until snug to pressurize ink systems. Turn ink on at solenoid valve and slide valve on manifold following directions of arrows. Check system for leaks.

18. Install recorder back into case or cabinet in reverse order of disassembly.

FIGURE 5-4 RECORDER, TOP VIEW

WARNING: THE INK PLUNGER ASSEMBLY CONTAINS A COMPRESSED SPRING WHICH COULD BE HAZARDOUS. DO NOT TAKE APART. USE CAUTION WHEN HANDLING.

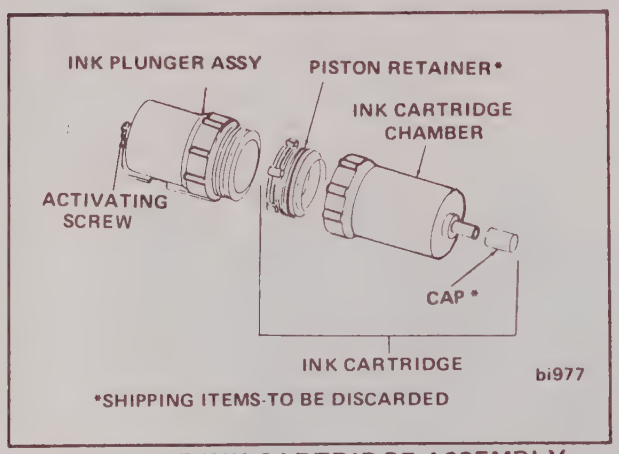


FIGURE 5-5 INK CARTRIDGE ASSEMBLY

### 5.2.3 Pen Replacement

Pens should only be replaced when excessively worn or broken. Replacement should be performed only by personnel who are familiar with the recorder. Replace and adjust one pen at a time.

*CAUTION: POWER IS TURNED OFF.*

a. Analog Pen

**NOTE: Analog Pen part number is Model 11-2823-42. Ink tubing is included with pen.**

1. Remove top front cover from recorder. (Slide cover forward and lift out.) This gains access to individual manual valves.

2. Slide ink valve of pen to be changed to "OFF" position. Follow direction of arrows on manifold bar. (See Figure 5-4).

*CAUTION: DO NOT PERMIT INK TO SPILL ON RECORDER COMPONENTS. PLACE PAPER TOWELS AROUND AREA.*

3. Carefully remove ink tube from manifold valve nipple. Wipe excess ink from nipple.

4. Raise pen access cover by pulling out on bottom and sliding back into recorder. Cover will be parallel with top of recorder.

5. Raise front of cover with one hand and carefully remove ink tube from pen with other hand. Discard ink tube.

6. Loosen two screws (do not remove) which secure pen to drive arm and carefully slide pen off in downward motion. (Figure 5-6).

**NOTE: If pen does not readily slide off, it may be necessary to loosen pen pressure adjustment screw also.**

7. Carefully slide new pen onto drive arm. Snug the two screws to secure pen. (Pen should be perpendicular to writing surface.)

8. Install new ink tubing between valve nipple and pen.

9. Slide ink valve to "ON" position. Follow direction of arrows on manifold bar.

10. Turn recorder ON and run at a chart speed of 5mm/sec.

11. Carefully lift pen slightly and allow ink to bleed through pen tip.

12. Shut down recorder.

13. Gently grasp pen near top and move it across entire channel. If trace is not parallel to a horizontal line and/or pen is not on same line as other pens, turn pen in screw slots and slide pen vertically. Tighten screws.

14. Lap pen per paragraph 5.3.4 if necessary.

15. Measure pen pressure per paragraph 5.3.3.

b. Event Marker Pen

**NOTES:**

1. **Use steps 1 thru 5 from paragraph 5.2.3a, Analog Pen, for changing Event Marker Pen.**

2. **Event marker Pen number is 267884-5; ink tubing P/N is 667447-1.**

1. Loosen two screws (do not remove) which secure pen to bracket assembly and carefully slide pen off in downward mottion (Figure 5-6).

**NOTE: If pen does not readily slide off, it may be necessary to loosen pen pressure adjustment screw also.**

2. Carefully slide new pen between pen pressure bracket and bracket assembly. Snug the two screws to secure pen. (Pen should be perpendicular to writing surface.)

3. Install new ink tubing between valve nipple and pen.

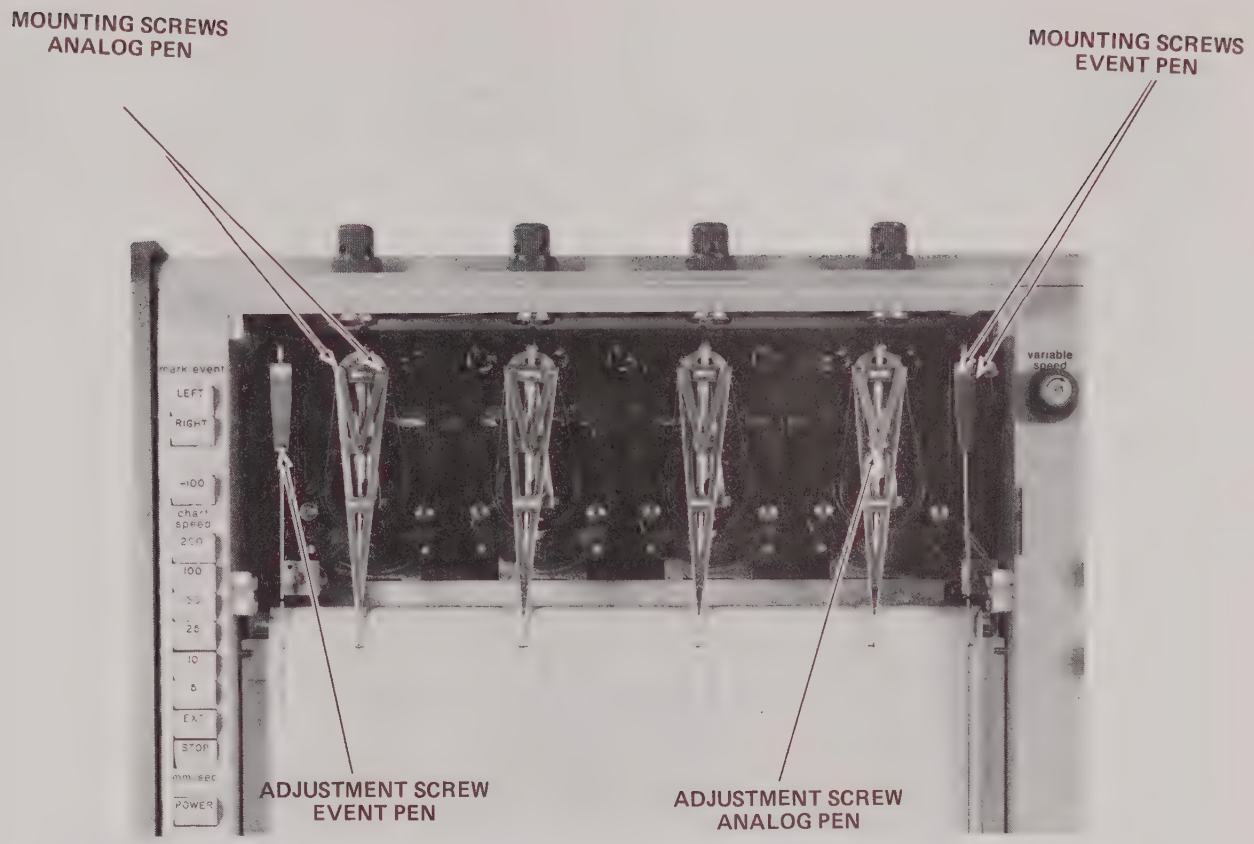


**FIGURE 5-6 PEN REPLACEMENT** bi 2218

4. Slide ink valve to "ON" position.

5. Turn recorder ON and run at a chart speed of 5mm/sec. Adjust pen ZERO to set pen on event gridline.

6. Carefully lift pen slightly and allow ink to bleed through pen tip.

7. Shut down recorder.

8. If pen tip is not on same line as other pens, loosen screws and slide pen vertically. Tighten screws.

9. Lap pen per paragraph 5.3.4 if necessary.

10. Measure pen pressure per paragraph 5.3.3.

### 5.2.4 Fuse Replacement

**WARNING: BEFORE ATTEMPTING TO REPLACE FUSES TURN POWER OFF AND DISCONNECT RECORDER FROM POWER SOURCE.**

All fuses are located on the Control/Timer Board Assembly. The board is a plug-in module accessible from the rear panel. (See Figure 5-7.) The Control Board is easily distinguished from the other boards because a timer switch is mounted on its heat sink. Remove the top and bottom screws which secure the board to the recorder and remove the board by grasping the heat sink and pulling it out and away from the recorder. All fuses are located near the top of the Control Board. Table 5-1, which follows, defines usage of all fuses.

## TABLE 5-1 FUSE TABLE

| FUSE SYMBOL | *MODEL, AMP-RATING & PART NUMBER -00 (115V) | -01 (100V) | -06 (230V) | -07 (200V) | CIRCUIT PROTECTED |
|---|---|---|---|---|---|
| F-701, F-704 | 1 Amp 116198-10 | 1-1/2 Amp 116198-11 | 1/2 Amp 116198-8 | 3/4 Amp 116198-9 | Pen-Drive |
| F-709 | 3/4 Amp 116198-9 | 3/4 Amp 116198-9 | 3/8 Amp 116198-7 | 3/8 Amp 116198-7 | Chart Drive |
| F-711 | 1/8 Amp 116198-4 | 1/8 Amp 116198-4 | 1/8 Amp 116198-4 | 1/8 Amp 116198-4 | Ink Solenoid W/1 |
| | 1/4 Amp 116198-6 | 1/4 Amp 116198-6 | 1/4 Amp 116198-6 | 1/4 Amp 116198-6 | Ink Solenoid W/2 |

*Frequency for all models is 50/400 Hz.

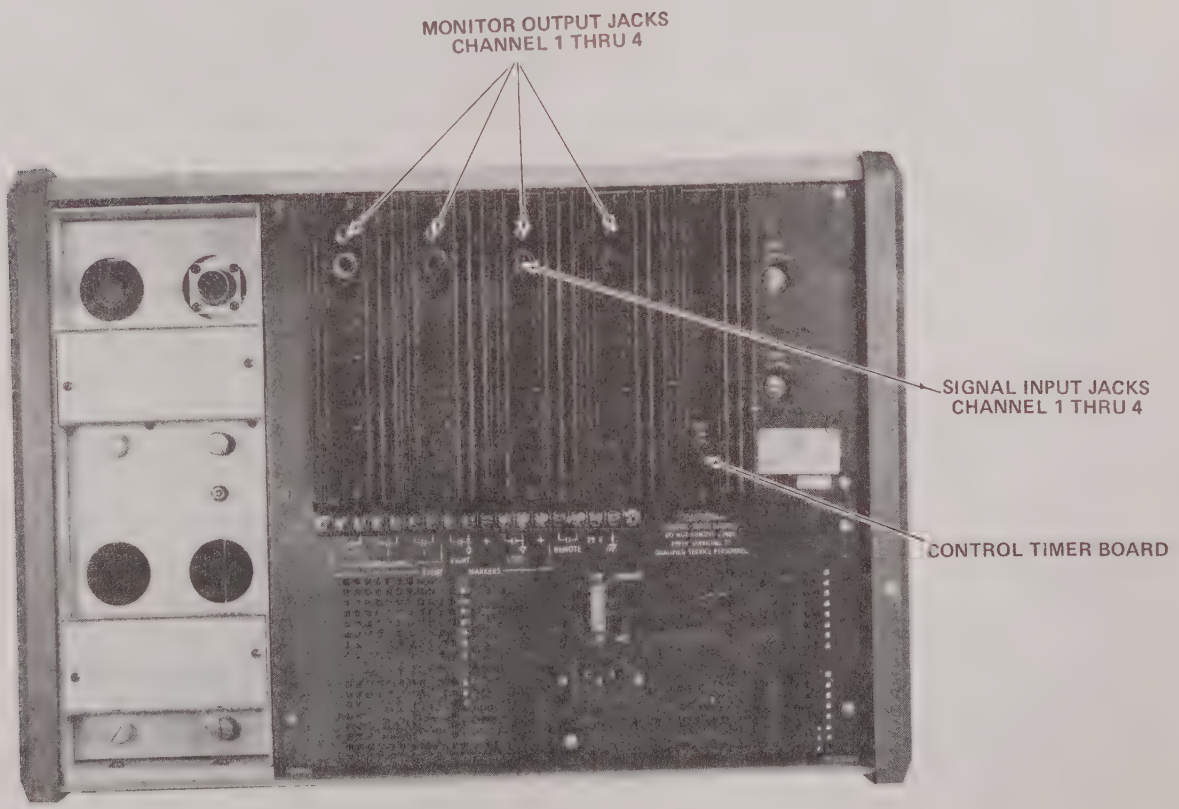


FIGURE 5-7 RECORDER, REAR VIEW

## 5.3 PREVENTATIVE MAINTENANCE

### 5.3.1 Recorder Cleaning

#### a. General Cleaning

*CAUTION: AVOID USE OF CHEMICAL CLEANING AGENTS WHICH MIGHT DAMAGE PLASTIC OR PAINTED SURFACES. DO NOT USE CHEMICALS WHICH CONTAIN TOLUENE, ACETONE, OR SIMILAR SOLVENTS.*

EXTERIOR: Remove loose dust with a soft cloth or small paint brush. Dirt which remains can be removed with a soft cloth dampened in a mild detergent and water solution. Do not use abrasive cleaners.

INTERIOR: Dust in recorder interior should be removed occasionally due to its electrical conductivity under high-humidity conditions. Blow off accumulated dust with dry, low-pressure air. Remove any dirt which remains with a soft paint brush or a soft cloth dampened in a mild detergent and water solution. A cotton-tipped applicator is useful for cleaning in narrow spaces and/or printed circuit boards.

#### b. Ink Removal

**NOTE: The recommended ink remover is ANCHOR HAND CREAM, No. 25 obtainable from Anchor Office Supply Company of Cleveland, Ohio.**

1. Blot up any excess ink with a tissue or paper towel.
2. Apply ink remover to the inked area ONLY. DO NOT attempt a general cleaning.
3. Gently rub the area with a soft cloth until the ink spot is removed.
4. Wipe the area thoroughly with a damp cloth.
5. Allow cleaned area to dry at least ten minutes before using recorder.

### 5.3.2 Pen Cleaning

Intermittent, missing, or faint traces may be indications of a clogged pen. The following cleaning procedure is intended as a guide, but may not always prove effective. Access to individual manual valves is required.

1. Turn recorder OFF.
2. Slide ink valve of pen to be cleaned to "OFF" position. Follow arrows.
3. Remove ink tubing from manifold valve nipple.
4. Remove pen (Paragraph 5.2.3a or 5.2.3b).
5. Modify No. 18 hypodermic needle per Figure 5-8.
6. Attach modified needle onto 2cc hypodermic syringe.
7. With syringe plunger depressed, insert needle in pen tubing.
8. Immerse pen tip in cleaning agent (Isopropyl Alcohol, Cell-O-Solve or equivalent.)
9. Back-flush by slowly withdrawing syringe plunger.

**NOTE: It may be necessary to allow the pen to remain for a brief period in the cleaning agent to dissolve dried ink at pen tip.**

10. Install pen (para. 5.2.3a or 5.2.3b).

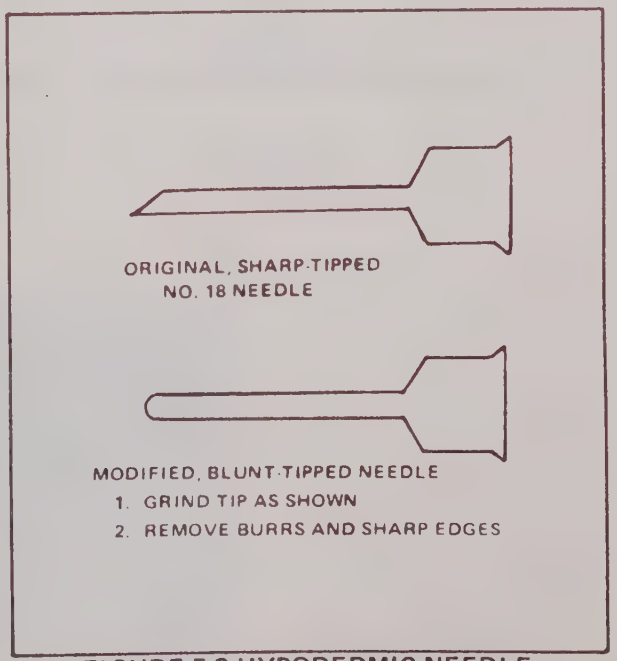


**FIGURE 5-8 HYPODERMIC NEEDLE MODIFICATION**

### 5.3.3 Pen Pressure Measurement

Analog or event marker pen pressure should be checked after replacement, if the ink trace is excessively wide (bleeding), indicating low pen pressure or if pen gouges the chart paper, indicating excessive pen pressure.

**NOTE: Wide trace may also indicate an improperly lapped pen. Refer to Paragraph 5.3.4 for pen lapping procedures.**

The gram gage (part number 240601-910) is used to measure the pressure of the analog and event marker pens as follows:

1. Raise pen access cover by pulling out on bottom and sliding back into recorder.
2. Turn ON recorder and set chart SPEED at 5mm/sec.
3. Place gram gage hook under pen as close as possible to top. Form a right angle to pen shaft with hook (Figure 5-9).
4. Pull pen from chart as shown in Figure 5-9 and take reading on gage the moment excessive ink starts to flow from pen.
5. Proper pressure for analog pens is 30 ±2 grams, for event marker pen 25 ±2 grams.
6. If pen pressure is not within specified limits, adjust pressure using special pen adjustment wrench (Gould part number 1-120922-18). Refer to Figure 5-10. Turn screw clockwise to increase pressure, counterclockwise to decrease pressure.
7. Recheck pen pressure per steps 3, 4 and 5.

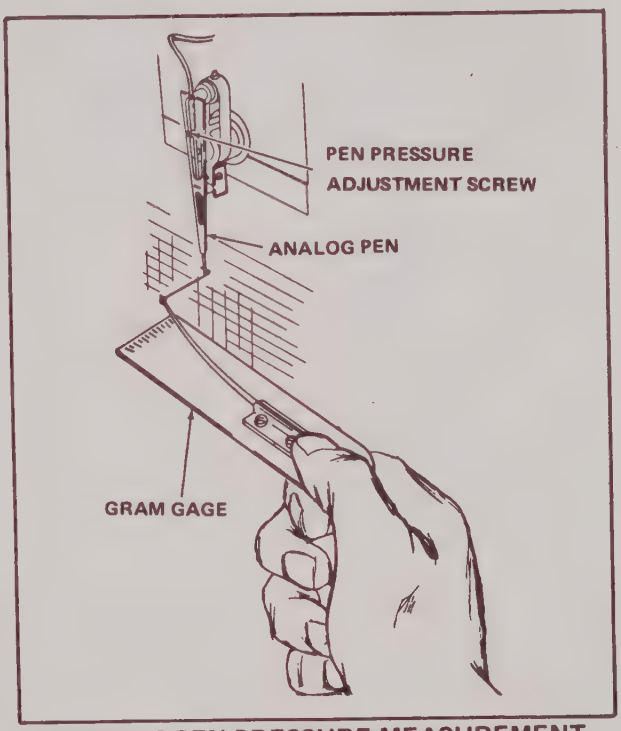


FIGURE 5-9 PEN PRESSURE MEASUREMENT

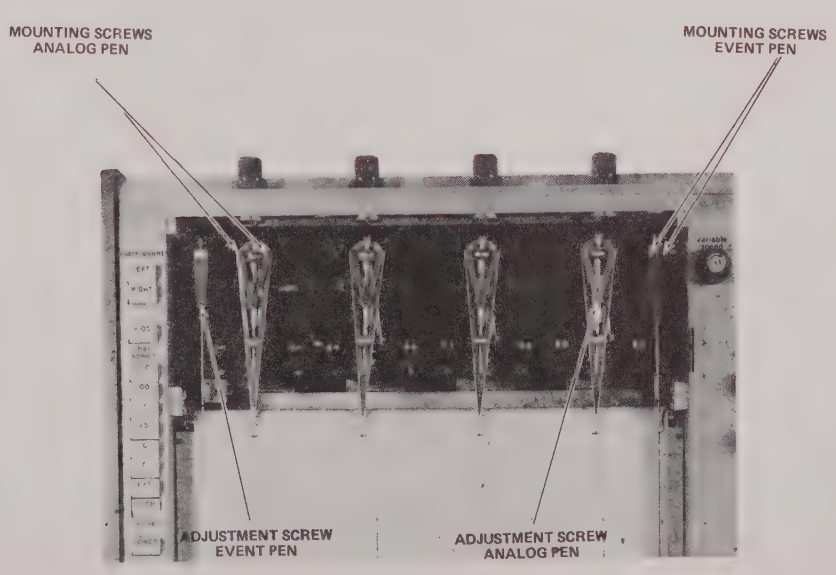


FIGURE 5-10 PEN PRESSURE ADJUSTMENT

### 5.3.4 Pen Lapping

#### a. General

This paragraph describes and illustrates the proper procedures for lapping the analog and event pens. Intermittent or "wet" ink trace are indications that pen pressure is incorrect or that pen requires lapping. Check for "wet" writing by operating the recorder (no signal applied). Check pen trace by wiping index finger, with moderate pressure, across trace approximately one inch below pen tip. If ink does not smear, pen is properly lapped. If trace smears, check and adjust pen pressure (Para. 5.3.3). Repeat test, and if trace continues to smear, lapping is required.

#### b. Lapping Procedures

*CAUTION: LAPPING SHOULD ONLY BE DONE WHEN ABSOLUTELY NECESSARY. EXCESSIVE LAPPING WILL SHORTEN PEN LIFE.*

1. Turn OFF recorder.

2. Raise pen access cover by pulling out on bottom and sliding it back into recorder.

3. Carefully raise pen tip just enough to slide a small strip of lapping paper (Gould P/N 669234, Silicon Carbide, M-600 grit) under pen tip.

4. Refer to Figure 5-11. Hold lapping paper flat against writing table and move it in a circular motion several times while gently pressing pen tip with finger.

5. Remove lapping paper and clean debris from pen tip. Operate recorder at 5mm/sec chart SPEED.

6. Check pen trace by wiping index finger, with moderate pressure, across trace about one inch below pen tip. If ink does not smear, pen is properly lapped. If ink smears, check pen pressure per paragraph 5.3.3.

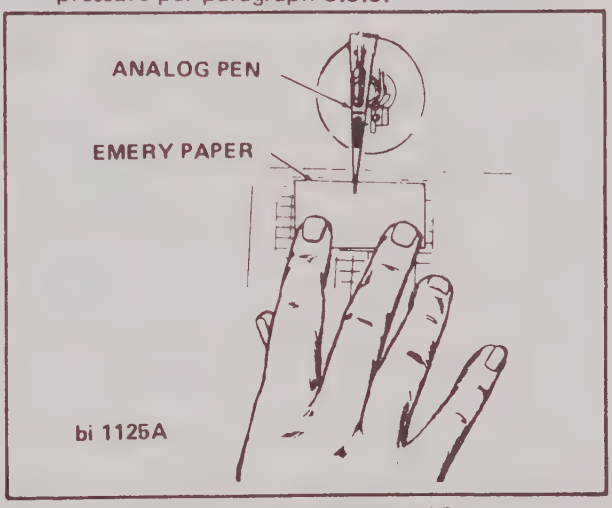


FIGURE 5-11 PEN LAPPING

### 5.3.5 Manifold Bleeding Procedure

a. General

After changing or replacing the manifold assembly, it is imperative that the inking system is bled before operating the recorder. This is necessary so that any air trapped in the system is removed to guarantee uninterrupted writing. It may be desirous to bleed the system when changing the ink cartridge and solenoid valve assembly also.

b. Bleeding Procedure

1. Use Figure 5-12 as an aid with the procedure that follows.

2. Turn all manual ink valves to OFF position. Follow arrows on manifold bar.

3. Turn ink solenoid valve OFF.

4. Disconnect all pen tubing only from manifold valve nipples. Replace with ink outlet caps (P/N 249360). All valve nipples on pen side of manifold must be capped.

5. If inking system is not under pressure turn activating screw on ink plunger assembly (Figure 3-2) counterclockwise until ink fills tubing linking ink cartridge with solenoid valve.

6. Turn ink solenoid valve ON. Push hinged valve closed with finger (Figure 5-12). Solenoid plunger will close, opening diaphragm in valve assembly. Hold closed. Ink should fill tubing linking solenoid valve with manifold supply valve.

7. Open manifold supply valve. Turn to "ON" position. Manifold should fill with ink.

8. Place paper towels under capped manifold valve nipples.

9. Remove cap from valve nipple farthest from manifold supply valve.

10. Allow a few drops of ink to drip from the nipple by turning the valve directly behind it in the direction of the arrow to "INK ON".

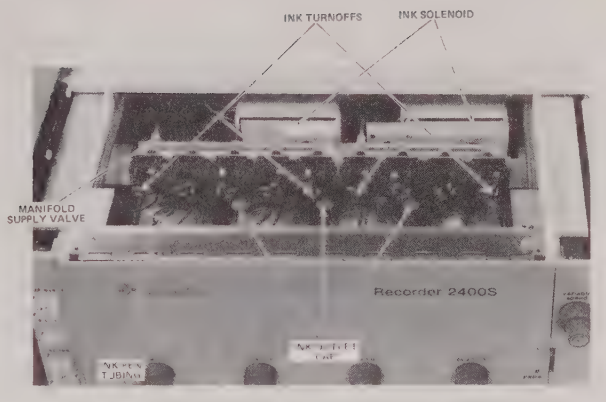


FIGURE 5-12 BLEEDING THE INKING SYSTEM

11. Turn the ink off by turning the valve in the direction of the arrow to "INK OFF". Wipe the nipple free of excess ink and replace the outlet cap.

12. Repeat steps 9 thru 11 for the next closest nipple to the supply valve and so on until all nipples are bled.

13. Replace ink outlet caps with pin tubing where removed in step 4.

### 5.3.6 Case Removal (Portable Models)

When removing the case, be careful not to damage gears or switchboard on recorder assembly.

1. Remove front slide covers from top of recorder case.

2. Remove the three screws located on top of recorder.

3. If recorder is equipped with preamplifiers, remove retainer. (Hardware linking preamp cage with recorder, at top of recorder).

4. If recorder is equipped with preamplifiers, disconnect preamp cage connector (P203) at top of recorder just behind where retainer was.

5. Remove 6 large machine screws from bottom of case.

6. Slide recorder out from FRONT of case. Push from rear and/or pull from side plates. Do not pull from top front of recorder or chart take-up.

# SECTION 5.4

# CALIBRATION

## 5.4.1 General

The Gould 2400S Series Recorder has been factory calibrated. Under normal conditions, it will not be required. However, calibration may be required when parts are replaced. This section describes the procedures necessary to calibrate the 2400S Series Recorder. Calibration should only be performed by qualified individuals.

## 5.4.2 Test Equipment Required

Proper test equipment is essential. Use the equipment specified below or its equal.

a. Voltmeter - Triplet Model 630 APL or equivalent.

b. D.C. Calibration Source - Digitek Model 3110 or equivalent.

c. Function Generator - Wavetek Model 164 or equivalent.

d. DVM - Data Precision Model 3500 or equivalent.

e. Oscilloscope - Gould OS 245 or equivalent.

f. PT-3783 Remote Control.

## 5.4.3 Preliminary Set-Up

a. If the recorder contains preamplifiers, remove each preamplifier from its cage prior to calibrating the channel.

b. Depress recorder STOP button.

c. Plug ac line cord into the proper ac voltage source.

d. Turn ON the recorder.

## 5.4.4 Calibration Procedure

Calibration is required on pen drive amplifiers (one per channel) and preamplifiers (if recorder is so equipped). Only pen drive amplifier and stepper drive calibration is discussed in this manual. Refer to the applicable preamplifier manual for its calibration.

Calibration controls and procedures are identical for all channels. Refer to Figure 5-13 and calibrate each pen drive amplifier as follows:

## 5.4.5 Span Adjustment

1. Remove the Recorder top rear cover to gain access. Slide cover back and lift out.

2. Connect a D.C. calibration source thru the large telephone jack, J-201, to amp input. Run the chart at 5mm/sec. Set the input to zero. Using the pen position on the front panel set the pen on the channel zero line on the chart.

3. Apply a +2.5 ±.25mV signal to the input to deflect the pen to the left. Adjust the span control, R201, for a 50% ±0.1% of full channel width deflection.

## 5.4.6 Limit Adjustment

1. Set the input to zero and turn the pen position fully counterclockwise. Adjust the left limit, R202, for 1.5 ±.25mm deflection beyond the left channel margin.

2. Turn the pen position fully clockwise and adjust the right limit, R203, in a similar manner. Center the pen on chart.

## 5.4.7 Damping Adjustment

1. Connect a function generator to the input and apply a 4 volt peak to peak square wave with a 1Hz rep rate.

2. Turn the damping control, R204, clockwise to obtain an overshoot on the pen trace, then turn it counterclockwise to reduce the overshoot to zero. Check the overshoot at 20 and 100% pen deflection. There should be zero overshoot in either case; readjust if necessary.

### 5.4.8 Frequency Compensation Adjustment

1. Set the function generator for a 5Hz sine wave and the chart speed at 25mm/sec. Adjust the input amplitude to obtain a 40mm pen deflection on the chart.

2. Step change the input frequency from 5 to 50Hz. Adjust the freq. comp., R205, so that the 50Hz amplitude is within .1mm of the 5Hz amplitude.

### 5.4.9 Main Frame Tests

Chart Speed Accuracy - 90% of Line Voltage

1. Set variable speed control to detent. Connect a one second, line synchronous, time base generator to the left event marker terminals on TB101-6 and 7 run the chart at 100mm/sec at low line voltage, for at least 20 seconds. Measure the distance between the second and the 11th timer mark. It should be 1000 ±2.5mm. Insure that all chart speed buttons function.

2. With variable speed control set to detent, run chart at 25mm/sec. Set variable speed control to full CCW position and verify that chart speed is less than 10mm/sec. Return to detent.

### 5.4.10 Remote Control

1. Set chart to stop. Remove the remote link on TB101-3 and -4. Install a SPST switch, run the recorder at 5mm/sec. Operate the remote link switch. The chart should start and stop depending on the switch position. Stop chart and replace the remote link.

2. Plug PT-3783 into the remote connector J102. Put remote enable switch in 'local' position. Put 'stop' switch in 'go' position. Select a speed of .05mm/sec. On switches S1 thru S4 of PT-3783 select the chart speed code for .05mm/sec. (See Table 3-3).

3. Put remote enable switch to 'remote'. Verify no change in operation.

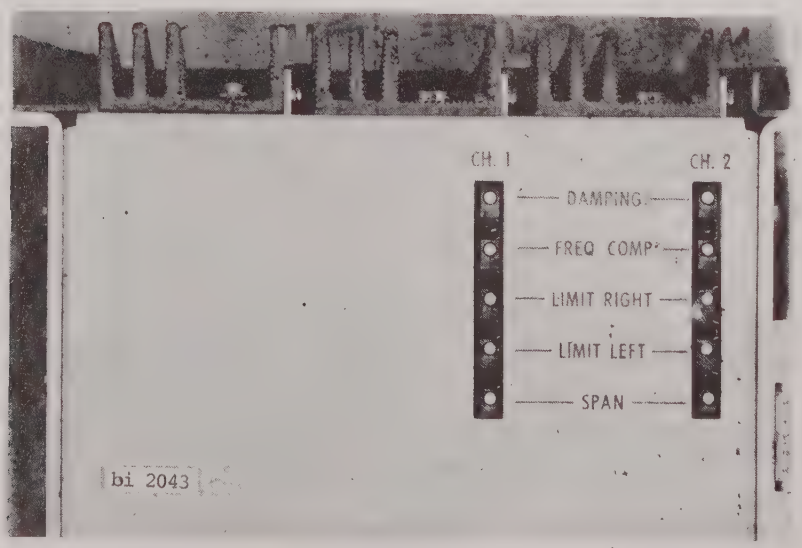


FIGURE 5-13 TYPICAL CALIBRATION CONTROLS

4. Leaving remote enable in remote, select another speed on the recorder front panel. Verify no change in operation.

5. Repeat steps 1 thru 4 for the other speeds.

6. With remote enable in remote position and the code for 5mm/sec on S1-S4, operate 'stop' switch. Verify that chart stops.

7. Repeat 3-6 with remote enable in 'local' position, and a speed of 5mm/sec selected on front panel.

8. With enable in 'local' position, connect a TTL compatible pulse train to J102 pin 9. Select 'ext' on the front panel. Verify that the chart moves proportionally with the frequency of the pulse train up to 20KHz. Start at 10KHz and gradually accelerate to 20KHz. 20KHz will give a chart speed of approximately 250mm/sec.

### 5.4.11 Standard Event Markers

1. Run the recorder at 5mm/sec and alternately short and unshort TB101-6 and -7. The left event marker should deflect to the left when the terminals are shorted. Repeat for the right event marker shorting TB101-9 and -10.

2. Apply a +2.4 ±.1VDC signal to TB101-6 and -5. The left event marker should operate. Use TB101-9 and -8 to operate the right event marker. TB101-6 and -9 are common GND.

3. Push the chart drive stop and repeat the above tests. The event markers should not operate when the recorder is in the stop mode.

### 5.4.12 Optional Event Markers

1. Run the recorder at 5mm/sec and alternately short and unshort terminals TB101-11 and -12. The first optional marker should operate. Optional event markers use pairs of terminals where the odd terminal is grounded. The second optional event marker is connected to TB101-13 and -14. Check out all event markers.

2. With the recorder in the stop mode, optional event markers should not operate.

### 5.4.13 2400S CHART DRIVE PROCESSOR BOARD ASS'Y (#893617) CALIBRATION

The purpose of this calibration procedure is to synchronize the selected speeds with the chart speed.

1. Set R432 (Processor Board) to mid-range and the variable speed control full clockwise to detent. (Refer to Figure 5-14).

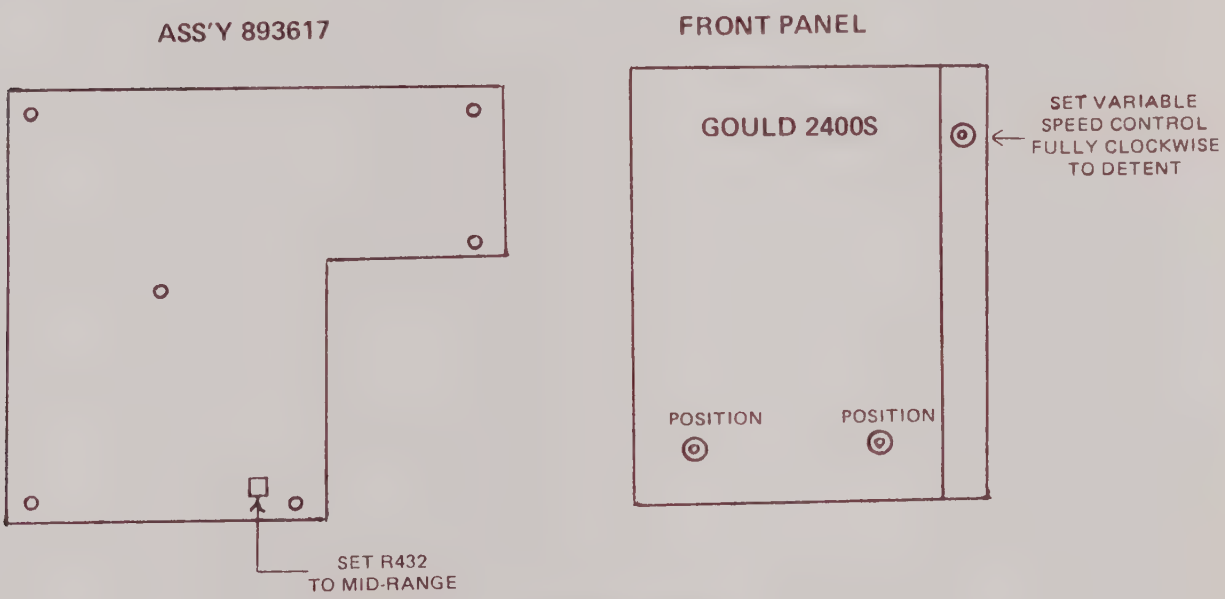


**FIGURE 5-14 PROCESSOR BOARD CALIBRATION**

2. Set Dip Switch S401 to hexadecimal 80 (See Figure 5-15).

3. Monitor TP1 with channel 2 of oscilloscope and TP2 with channel 1. Use pin 6 of J406 as common.

4. Adjust R432 to obtain a stable 0v ± 500Mv at TP1. TP1 may be "hunting", i.e. either a positive going or negative going level. The correct adjustment of R432 will eliminate this.

5. Connect a 1 second timer to the right event marker.

6. Select a chart speed of 25mm/sec and run out 1 meter of chart paper. Measure event tics with meter stick. This distance between 41 consecutive tics should be 1 meter ±2.5mm.

7. If the distance in step 6 was too great, the chart is fast. Increment the number on S401 (See Figure 5-15).

**NOTE: Whenever S401 is changed to a new value, make sure you depress the stop button before proceeding with calibration. Depressing the stop button allows the processor to read the new speed.**

8. If the distance measured in step 6 was too small, decrement the number on S401 (See Figure 5-15).
9. Select any speed, and then select stop.
10. Repeat steps 6 thru 9 until the distance measured is 1 meter ±2.5mm.
11. Adjust R432 for 0V ±100Mv at TP1 using a DVM with chart running at 25mm/sec.
12. Check speed at 100, 50, 10, and 5mm/sec. using the event timer and meter stick.

| | INCREASE | | | | | | | | | DECREASE | | | | | | | |
|---|---|---|---|---|---|---|---|---|---|---|---|---|---|---|---|---|---|
| Hex No. | 1 | 2 | 3 | 4 | 5 | 6 | 7 | 8 | Hex No. | 1 | 2 | 3 | 4 | 5 | 6 | 7 | 8 |
| 80 | On | On | On | On | On | On | On | Off | 80 | On | On | On | On | On | On | On | Off |
| 81 | Off | On | On | On | On | On | On | Off | 7F | Off | Off | Off | Off | Off | Off | Off | On |
| 82 | On | Off | On | On | On | On | On | Off | 7E | On | Off | Off | Off | Off | Off | Off | On |
| 83 | Off | Off | On | On | On | On | On | Off | 7D | Off | On | Off | Off | Off | Off | Off | On |
| 84 | On | On | Off | On | On | On | On | Off | 7C | On | On | Off | Off | Off | Off | Off | On |
| 85 | Off | On | Off | On | On | On | On | Off | 7B | Off | Off | On | Off | Off | Off | Off | On |
| 86 | On | Off | Off | On | On | On | On | Off | 7A | On | Off | On | Off | Off | Off | Off | On |
| 87 | Off | Off | Off | On | On | On | On | Off | 79 | Off | On | On | Off | Off | Off | Off | On |
| 88 | On | On | On | Off | On | On | On | Off | 78 | On | On | On | Off | Off | Off | Off | On |
| 89 | Off | On | On | Off | On | On | On | Off | 77 | Off | Off | Off | On | Off | Off | Off | On |
| 8A | On | Off | On | Off | On | On | On | Off | 76 | On | Off | Off | On | Off | Off | Off | On |
| 8B | Off | Off | On | Off | On | On | On | Off | 75 | Off | On | Off | On | Off | Off | Off | On |
| 8C | On | On | Off | Off | On | On | On | Off | 74 | On | On | Off | On | Off | Off | Off | On |
| 8D | Off | On | Off | Off | On | On | On | Off | 73 | Off | Off | On | On | Off | Off | Off | On |
| 8E | On | Off | Off | Off | On | On | On | Off | 72 | On | Off | On | On | Off | Off | Off | On |
| 8F | Off | Off | Off | Off | On | On | On | Off | 71 | Off | On | On | On | Off | Off | Off | On |
| 90 | On | On | On | On | Off | On | On | Off | 70 | On | On | On | On | Off | Off | Off | On |
| 91 | Off | On | On | On | Off | On | On | Off | 6F | Off | Off | Off | Off | On | Off | Off | On |

80

1 COUNT = .125MM/1000MM

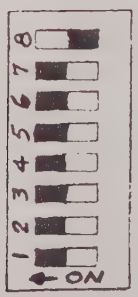


S401

OFF = 1
ON = 0

LAYOUT TYP

FIGURE 5-15 S401 POSITIONS

## SECTION 5.5

## TROUBLESHOOTING

### 5.5.1 General

This section provides troubleshooting hints to assist the operator and/or serviceman in locating malfunctions that are the possible causes and remedy. If a problem exists which is not identified in this section, contact the factory for assistance.

### 5.5.2 Electrical Power Malfunctions

| MALFUNCTION | CAUSE | REMEDY |
|---|---|---|
| 1. Recorder inoperative (Power ON and INTER-LOCK Lamps are ex-tinguished with POWER ON switch depressed. | a. Recorder not connected to power source. | a. Connect to power source. |
| | b. Fuse F709 blown | b. Replace fuse. |
| | c. POWER ON switch defective. | c. Replace switch. |
| 2. Recorder Inoperative (POWER ON and INTER-LOCK Lamps are illuminated. | a. Chart Paper torn or supply is depleted | a. Rethread or replace chart paper. |
| | b. INTERLOCK switch defective. | b. Replace switch |

### 5.5.3 Chart Drive Malfunctions

| MALFUNCTION | CAUSE | REMEDY |
|---|---|---|
| 1. Inoperative | a. Desired Chart SPEED button not depressed | a. Depress desired chart speed button. |
| | b. Drive belt worn or broken. | b. Replace drive belt. |
| | c. Jumper between pins 3 & 4 of TB101 missing. | c. Replace Jumper. |
| | d. Fuses F709 blown. | d. Replace Fuse. |
| | e. Motor defective. | e. Replace motor. |
| | f. Chart speed switch defective. | f. Replace switch board assy. |
| | g. Relay K701 defective. | g. Replace relay. |
| | h. Defective Power Supplies | h. Troubleshoot Power Supplies. |
| | i. Bad Switching Amp Board | i. Refer to Section 5.5.9 |

### 5.5.3 Chart Drive Malfunctions - Continued

| MALFUNCTION | CAUSE | REMEDY |
|---|---|---|
| 2. Inoperative on divide by 100 speed. | a. Broken wire | a. Replace wire. |
| | b. Switch defective | b. Replace switch. |
| 3. Chart runs intermittently only at 200mm/sec speed | a. Sensor Board Assembly | a. Replace |
| 4. Chart speed not accurate or is erratic. | a. Drive roll worn excessively. | a. Clean or replace drive roll. |
| | b. Processor Board Bad | b. Refer to Section 5.4.13 |

### 5.5.4 Writing System Malfunctions

| MALFUNCTION | CAUSE | REMEDY |
|---|---|---|
| 1. Trace missing or faint. | a. Ink supply exhausted. | a. Replace ink cartridge. See paragraph 5.2.2. |
| | b. Screw on ink cartridge not fully counterclockwise. | b. Turn screw fully counterclockwise. |
| | c. Ink manifold valves not in full ON position. | c. Rotate to full ON position. |
| | d. Pens clogged. | d. Clean or replace pens. |
| | e. Ink manifold solenoid defective. | e. Replace solenoid. |
| | f. Ink manifold solenoid de-energized. | f. Fuse 711 blown: replace fuse. |
| | g. Air in System. | g. Bleed System. |
| 2. Trace heavy or wet; pen gouges paper. | a. Pen excessively worn. | a. Replace pen. |
| | b. Pen not properly lapped. | b. Lap pen. |
| | c. Improper pen pressure. | c. Adjust pen pressure. |
| 3. All pens not on same time line. | a. Pen(s) out of alignment. | a. Align Pen(s). |
| 4. Pen fails to return to same position each time. | a. Loose pen. | a. Align and tighten pen. |
| | b. Loose penmotor linkage. | b. Replace penmotor. |

### 5.5.5 Signal Malfunctions

| MALFUNCTION | CAUSE | REMEDY |
|---|---|---|
| 1. Trace unusually wide. | a. Noise appearing at the pen tip. | a. Check input signal and connections. Defective drive amplifier or pre-amplifier boards; repair or replace. |
| 2. No signal on any or all channels. | a. Drive amplifier or pre-amplifier defective. | a. Replace drive amplifier or preamplifier. |
| | b. Drive amp fuse(s) blown. | b. Replace fuse(s) after correcting malfunction. |
| | c. Chart speed stop switch defective. | c. Replace switch. |
| 3. Pens limp or biased to either side. | a. Drive amplifier or preamplifier defective. | a. Repair or replace drive amplifier or preamplifier. |
| | b. Recorder requires calibration. | b. Calibrate recorder. |
| | c. Pen loose. | c. Align and tighten pen. |
| | d. Defective pen position pot. | d. Replace pen position pot. |

### 5.5.6 6502 Processor Board Ass'y (#893617) Troublshooting

The purpose of this troubleshooting procedure is to allow the serviceman the capability of identifying a failure within the processor board, to a specific component or area on the processor board. This can be achieved by comparing known "Good" signatures of a working unit, to those signatures of a bad unit.

Test Equipment Needed

1. 5004A Signature Analyzer (Hewlett Packard)
2. 6502 Free-Running Test Adapter can be obtained from Gould Service Department.
3. 1-40 Pin Dip Clip
4. 2-16 Pin Dip Clips
5. Jumper Leads
6. A Universal Frequency Counter
7. Oscilloscope (Tektronix 465 or 466) or Gould 4000A Oscilloscope

### 5.5.7 Preliminary

All waveforms were taken with a chart speed of 5mm/sec.

1. The first place to check on the Processor Board 893617 is for the sine and cosine waveforms and gating signals.

2. This can be achieved by connecting an oscilloscope to J402 pins 2 or 1 for the sine and cosine outputs, and J402 pins 4 or 5 for their respective gating signals. Refer to Figures 5-16, 5-17, and 5-18.

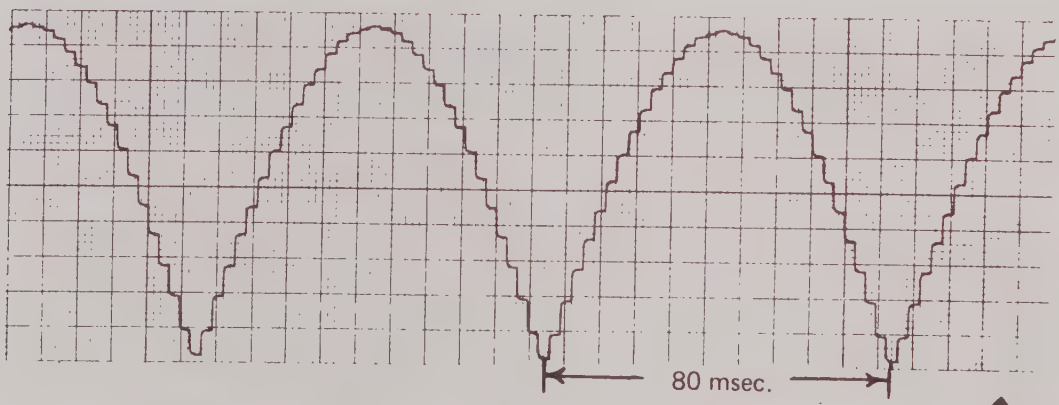


FIGURE 5-16 OUTPUT SIGNAL 5V PEAK U424-1 OR J402-2 SINE (1)

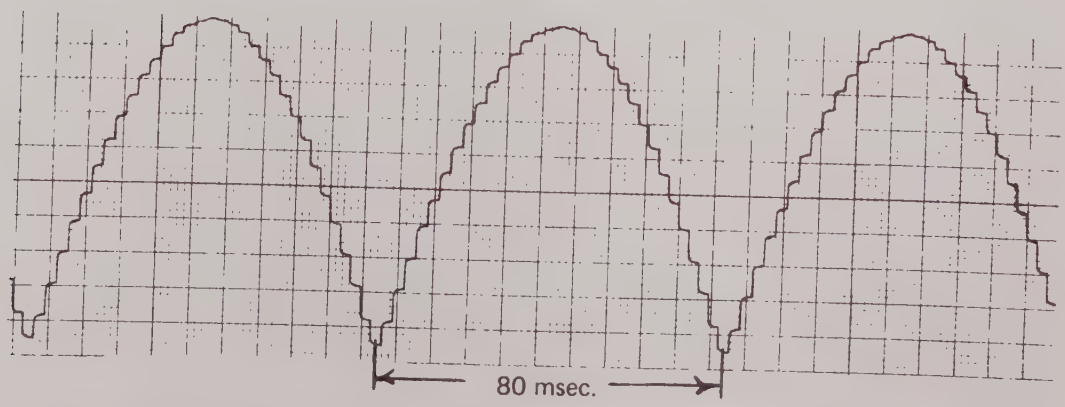


FIGURE 5-17 OUTPUT SIGNAL 5V PEAK U424-7 OR J402-1 COSINE (2)

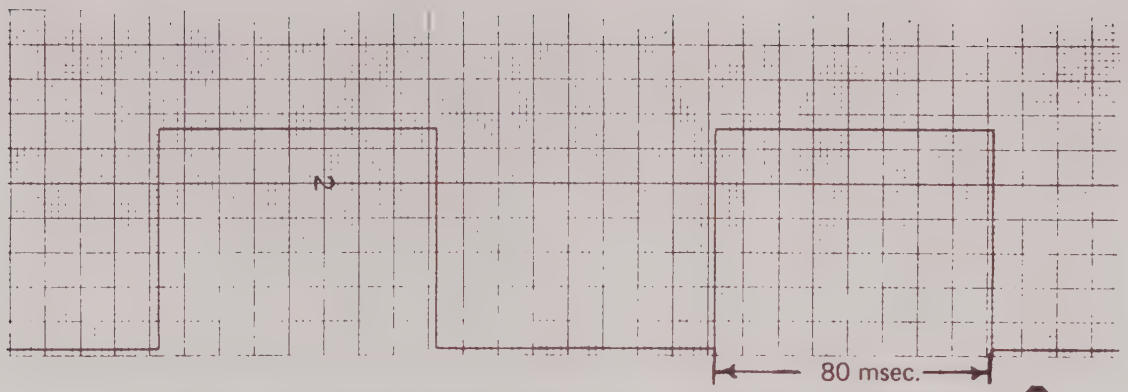


FIGURE 5-18 AND 4 GATING SIGNAL 3.8V PEAK J402-4 OR J402-5 (3)

3. If the waveforms shown in 5-16, 5-17, and 5-18 agree with your waveforms, the Processor Board is functioning properly.

4. Using a frequency counter, verify the following frequencies.

   a. Check pin 8 of U401 for a frequency of 4MHz ±.01 Hz.
   b. Check pin 1 of U412 and verify a frequency of 4MHz ±.01 Hz.

**NOTE: The preceding two checks verify that the 4MHz crystal oscillator is working.**

   c. Check pin 39 of U427 and verify a frequency of 1MHz ±.01 Hz.
   d. Check pin 7 of U407 and verify a frequency of 100KHz ±.01 Hz.
   e. Check pin 7 of U406 and verify a frequency of 100Hz ±.01 Hz.
   f. Check pin 9 of U405 and verify a frequency of 10Hz ±.01 Hz.
   g. Check TP2 and verify a frequency of about 16KHz, with the variable speed knob fully clockwise in the detent position. This check will insure that the step clock system is functioning correctly.

### 5.5.8 2400S Switching Amplifier Board Troubleshooting Assy 893618

1. Disconnect the Stepper Motor by removing the J503 plug.

2. Connect two 47K ohm ¼ watt resistors in parallel with the 2.2 mega ohm feedback resistors of the error amplifier U501. (Refer to Figure 5-20).

3. Connect 4-1K ohm ¼ watt load resistors to J503 pins 8 and 2, 7 and 1, 6 and 4, 5 and 3, to substitute the disconnect motor coils. (Refer to Figure 5-21).

4. Turn the recorder on and select a speed of 5mm/sec.

5. Referring to the Switching Amplifier Star Diagram (Figure 5-22), verify that the amplitudes of waveforms and respective frequencies are correct.

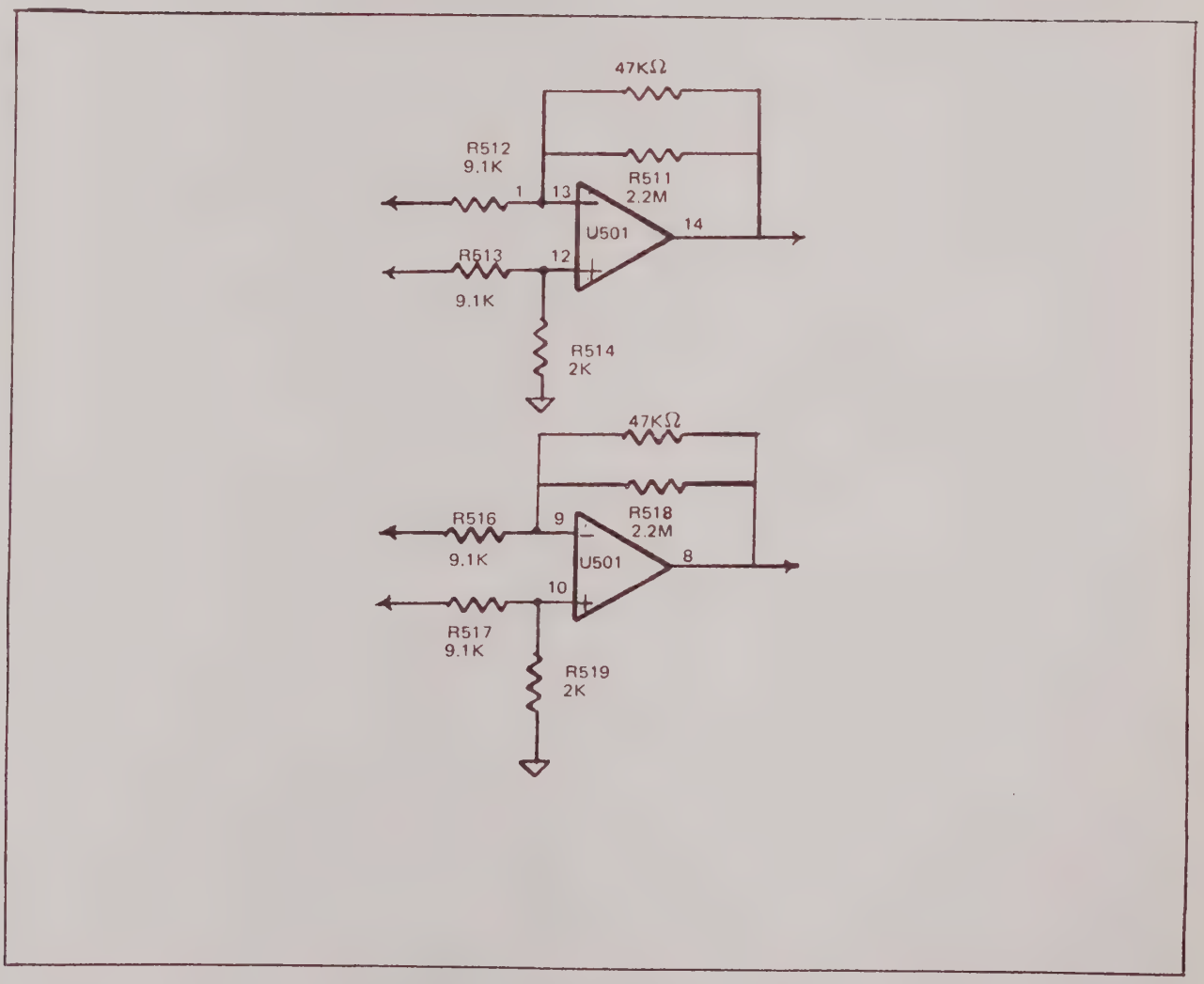


FIGURE 5-19 ERROR AMPLIFIER U501

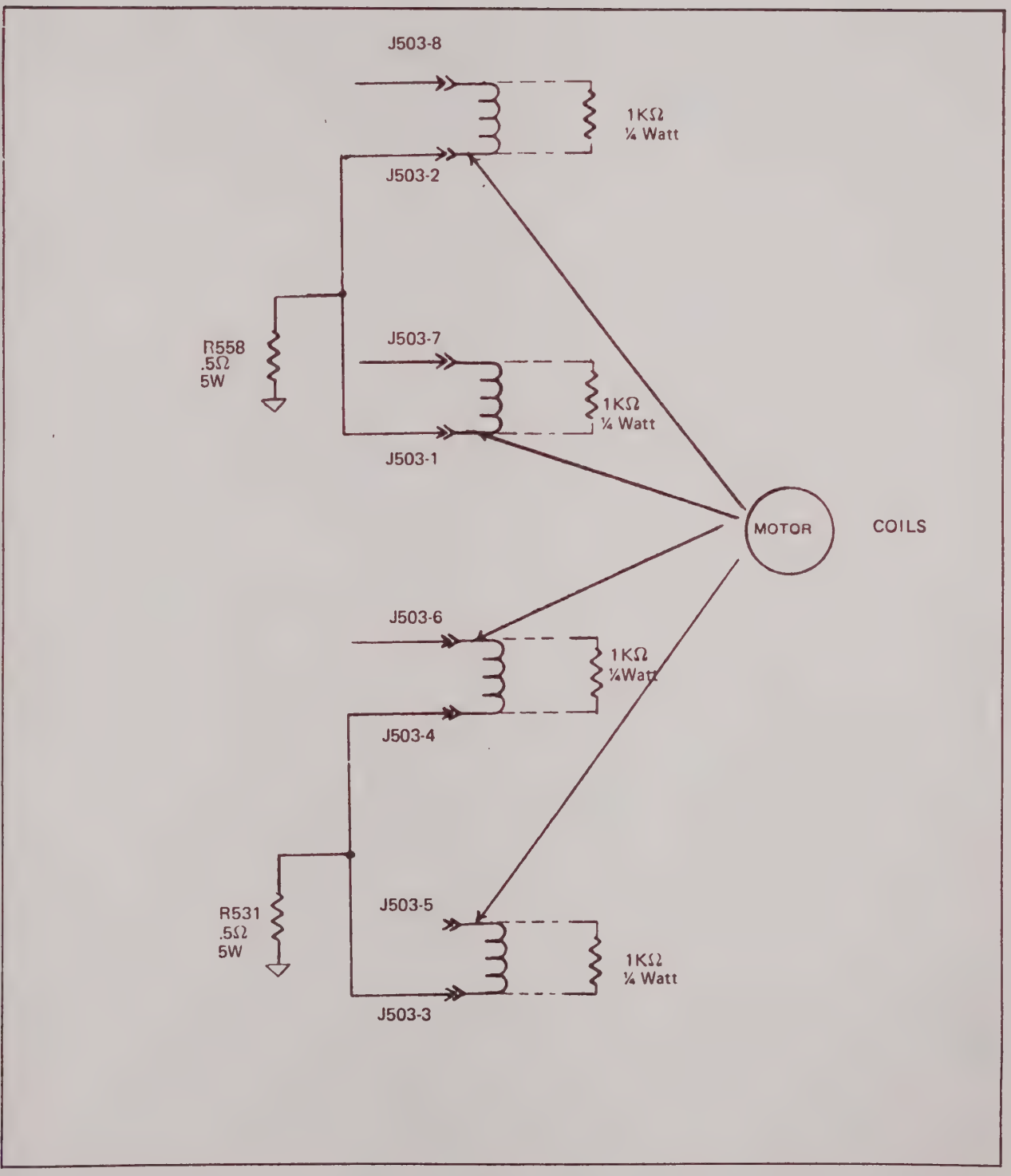


FIGURE 5-20 STEPPER MOTOR COILS

## 2200S SWITCHING AMPLIFIER STAR DIAGRAM

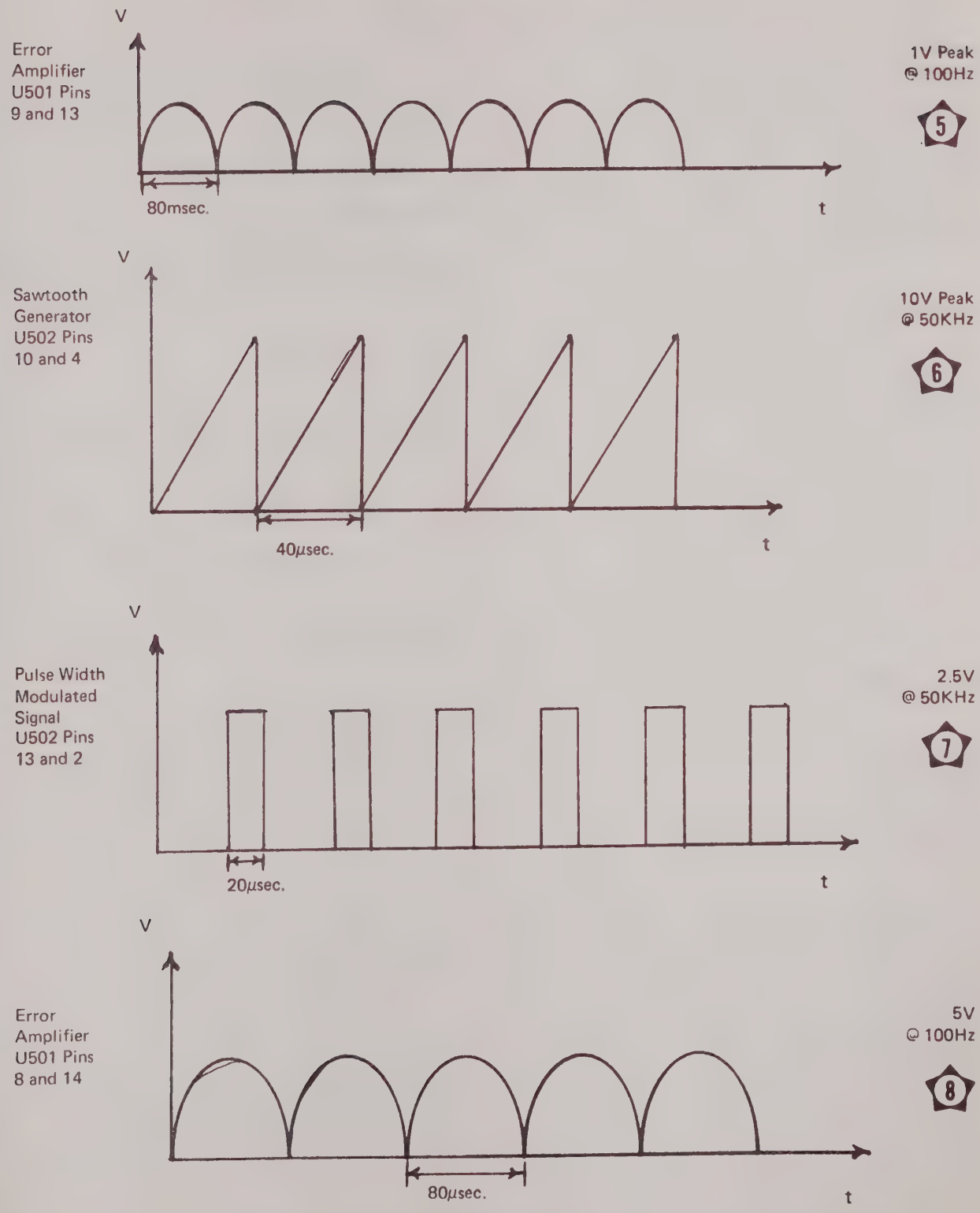


FIGURE 5-21 2200 S SWITCHING AMPLIFIER STAR DIAGRAM

## 5.6 SUBASSEMBLY REPLACEMENT

**NOTE: Paragraph 5.6.1, and Figures 5-23, 5-24 and 5-25 not used.**

### 5.6.2 Solenoid Valve Assembly Replacement

**NOTE: Refer to illustrated parts breakdown of recorder assembly in Section VI.**

WARNING: MAKE SURE POWER IS TURNED OFF AND RECORDER IS DISCONNECTED FROM POWER SOURCE.

Replace solenoid valve assembly (item 9) as follows:

1. Remove recorder from case per paragraph 5.3.6 (if recorder is rack mounted, slide recorder completely out of rack).
2. Turn OFF ink cartridge. (Activating Screw, Figure 3-2).

**NOTE: If solenoid only is to be replaced, turning ink off is not required.**

3. Remove Drive Amp board(s) and/or rear panel filler (for 1 channel recorders) from rear of recorder.
4. In cavity left by Drive Amp Board remove and retain 2 screws and washers in area of Drive Amp Board connectors. Solenoid Valve Assembly will fall away from opposite side of bracket wall.
5. Place paper towels around area underneath Solenoid Valve Assembly.
6. If entire assembly is to be replaced perform the following:
   a. Disconnect yellow and orange leads from solenoid terminals. Tag leads.
   b. Pull ink tubing from both valve nipples.
   c. Make connections to new Solenoid Valve Assembly in reverse order of "a" and "b" above. Attach assembly to bracket wall.
   d. It may be desirous to bleed the inking system at this point. Refer to Paragraph 5.3.5 for procedure.
7. If solenoid and diode only are to be replaced perform the following:
   a. Disconnect yellow and orange leads from solenoid terminals. Tag leads.
   b. Remove and retain cotter pin connecting solenoid plunger and valve link.
   c. Remove and retain 2 screws and washers from solenoid housing. Solenoid diode assembly will fall away from housing.
   d. Install new solenoid/diode assembly and make connections in reverse order of "a", "b" and "c" above. Attach Solenoid Valve Assembly to bracket wall.
9. Install recorder in case (or rack).

### 5.6.3 Manifold Assembly Replacement

**NOTE: Refer to illustrated parts breakdown of recorder assembly in Section VI.**

Replace Manifold Assembly (item 34) as follows:

1. Remove recorder from case per Paragraph 5.3.6 (if recorder is rack mounted, slide recorder a little more than halfway out of rack).
2. Turn OFF ink cartridge and solenoid ink valve.
3. Place paper towels around area underneath Manifold Assembly.
4. Pull off ink tubing from manifold to pens and manifold to ink cartridge.

5. Remove four machine screws which secure manifold assembly to side plates. Lift out manifold assembly.

6. Install new or repaired manifold assembly.

7. Replace ink tubing to manifold assembly.

8. Turn ON ink cartridge and solenoid ink valve. Check for leaks.

9. Bleed the inking system per paragraph 5.3.5.

10. Install recorder in case or slide recorder into rack and secure.

### 5.6.4 Table Assembly Replacement

**NOTE: Refer to illustrated parts breakdown of Recorder assembly and Writing Table assembly in Section VI.**

1. Remove recorder from case per paragraph 5.3.6 (If recorder is rack mounted, slide recorder a little more than halfway out of rack.)

2. Remove paper supply roll per paragraph 5.2.1.

3. Remove timing belt and pulley assembly from R.H. Plate Assy.

4. Remove retaining rings from table arms and carefully pry arms out of plate assemblies. Do not bend arms.

5. Tilt table slightly and pull out of recorder removing right and left hand lever assemblies.

6. Mount new or repaired table assembly on lever assemblies. Slide table into recorder and snap arms into side plate holes. Replace retaining rings, pulley assy and timing belt.

7. Replace paper supply roll and install recorder in case (or rack).

### 5.6.5 Stepper Motor Replacemement.

**NOTE: Refer to illustrated parts breakdown of Recorder Assembly, Section VI.**

**WARNING: MAKE SURE POWER IS TURNED OFF AND RECORDER IS DISCONNECTED FROM POWER SOURCE.**

Remove the Motor (M109) as follows:

1. Remove recorder from case per paragraph 5.3.6. (If recorder is rack mounted, slide recorder completely out of rack.)

2. Remove rear cover assembly. (Contains AC power cord and TB101.) Move cover away from rear of recorder. (If it becomes necessary to disconnect any leads, make sure they are tagged.

3. Remove the power supply board, by removing the four screws located at the bottom of recorder.

4. Remove timing belt from small (9 tooth) pulley.

5. Remove the four motor mounting nuts located on side of recorder, and remove the motor.

6. Remove and retain 9 tooth pulley (gear) from motor shaft.

7. Install 9-tooth pulley (gear) on shaft of new motor.

8. Install new motor in reverse order of the above procedure.

### 5.6.6 Chart Drive or Control Transformer Replacement (T109)

**WARNING: MAKE SURE POWER IS TURNED OFF AND RECORDER IS DISCONNECTED FROM POWER SOURCE.**

1. Remove recorder from case per paragraph 5.3.6 (If recorder is rack mounted, slide recorder a little more than halfway out of rack.)

2. Remove rear cover assembly. (Contains AC power cord and TB101.) Move cover away from rear of recorder. (If it becomes necessary to disconnect any leads, make sure they are tagged.

3. Remove power supply board per para. 5.6.5. Steps 1, 2, and 3.

4. Remove drive amplifier board.

5. Remove two screws holding transformer in place.

6. Install new transformer in reverse order of steps 3, 4, and 5.

### 5.6.7 Power Transformer Replacement T101 thru T104

**NOTE: Refer to illustrated parts breakdown of chassis assembly in Section VI.**

**WARNING: MAKE SURE POWER IS TURNED OFF AND RECORDER IS DISCONNECTED FROM POWER SOURCE.**

Replace power transformer(s) (item 84 as follows:

1. Remove recorder from case per paragraph 5.3.6. (If recorder is rack mounted, slide recorder a little more than halfway out of rack.)

2. Remove paper supply roll per paragraph 5.2.1.

3. Remove 2 screws securing transformer to chassis.

4. Note terminal/color code lead connections while disconnecting lugs and before transformer removal.

**NOTE: Twelve connections per transformer as follows:**

**1) Eight lugs on top of transformer.**
**2) Four leads at bottom of transformer which terminate at J1001.**

5. Remove defective transformer thru hole in front of recorder.

6. Install new transformer in reverse order of steps 3, 4 & 5.

7. Install paper supply roll.

8. Install recorder in case (or rack).

### 5.6.8 Penmotor Replacement

**NOTE: Refer to illustrated parts breakdown of recorder assembly and penmotor bar assembly.**

**WARNING: MAKE SURE POWER IS TURNED OFF AND RECORDER IS DISCONNECTED FROM POWER SOURCE.**

Remove penmotor as follows:

1. Remove recorder from case per paragraph 5.3.6. (If recorder is rack mounted, slide recorder completely out of rack).

2. Remove paper supply roll per paragraph 5.2.1.

**NOTE: To make room for penmotor to be removed from recorder assembly the manifold and valve solenoid assemblies must first be removed. Refer to paragraphs 5.6.2 and 5.6.3.**

3. Remove pen assembly by loosening 2 screws which secure it to drive arm. Slide pen down and away from penmotor. Refer to Figure 5-6.

4. Remove 2 socket head screws which mount penmotor to penmotor bar. Disconnect connector and remove penmotor from recorder.

5. Install new penmotor in reverse order of procedure above.

6. Install recorder in case (or in rack).

7. Perform calibration on penmotor drive amp after completing installation.

### 5.6.9 Replacing Penmotor Drive Band (684999)

**CAUTION: IT IS RECOMMENDED THAT THE DRIVE BAND BE REPLACED AT THE FACTORY SO THAT PROPER BAND TENSION IS MAINTAINED. SHOULD FIELD REPLACEMENT BECOME NECESSARY, PERFORM THE FOLLOWING STEPS.**

**NOTE: Refer to Figure 5-26 for loation of parts in capital letters.**

a. **Band Removal**

1. Remove Analog Pen Assembly.

2. Loosen (but do NOT remove) screws securing FRONT and REAR BAND CLAMPS.

3. Remove DRIVE BAND by sliding FREE END in counterclockwise direction from between REAR CLAMP and ANCHOR, then from between FRONT CLAMP and PULLEY.

4. Conclude removal by gently unhooking band from BAND ANCHOR.

b. **Band Replacement**

1. Place hooked (or bent) end of DRIVE BAND over ANCHOR as shown, and reinstall in clockwise direction between FRONT CLAMP and PULLEY, then between REAR CLAMP and ANCHOR.

2. Apply 5.5 to 6.5 pounds tenion to FREE END OF BAND with a spring clamp and spring tension scale or equivalent.

**NOTE: Be sure that tension is applied directly in line with band i.e., does not pull band forward or back.**

3. Maintaining tension, fully tighten all screws and apply a drop of Red Glyptal or equal at screwheads and mating surfaces.

4. Remove spring scale and spring clamp.

5. Reinstall Analog Pen.

6. Check frequency response for compliance with specifications given in Section I.

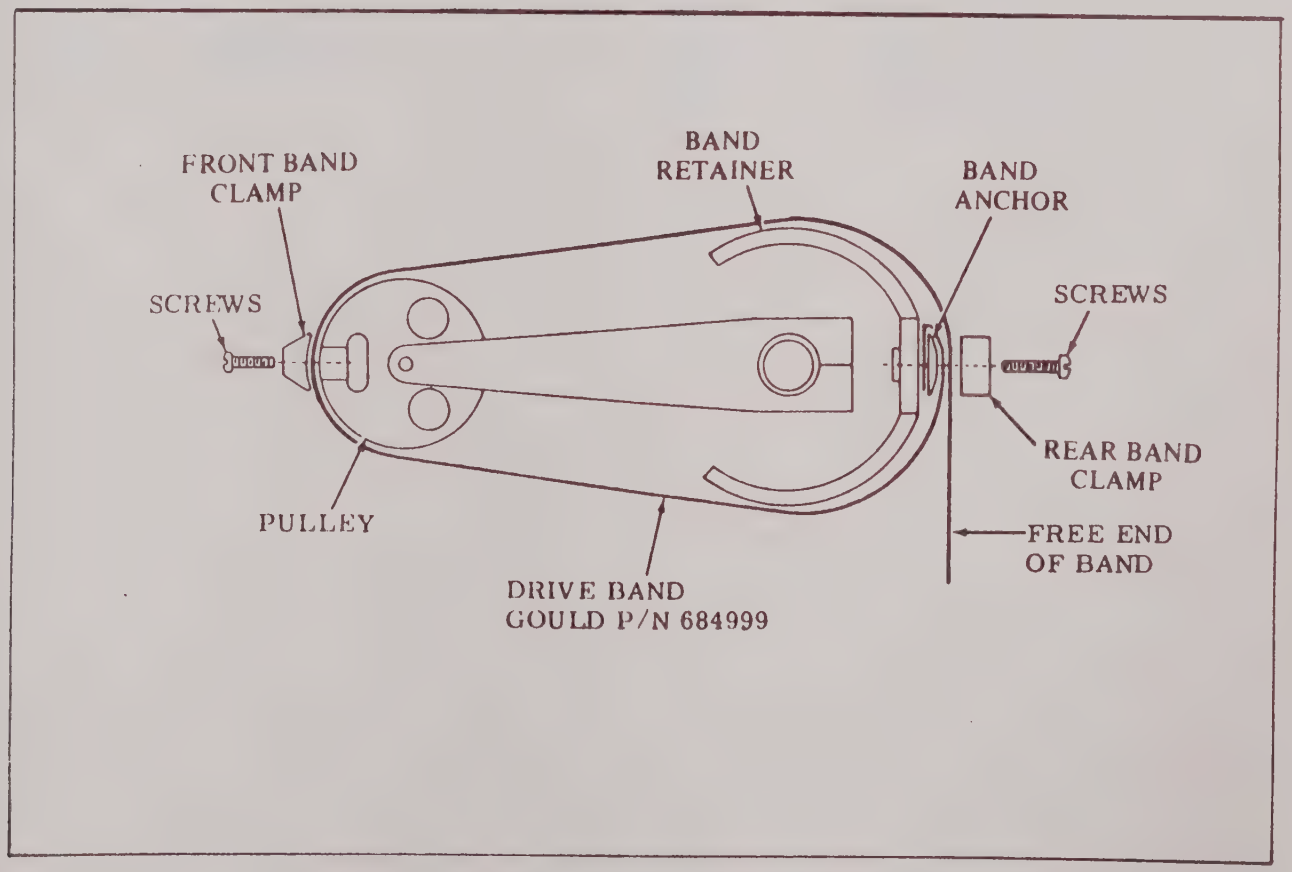


FIGURE 5-25 PENMOTOR DRIVE BAND REPLACEMENT

# SECTION VI

# PARTS IDENTIFICATION

## 1 GENERAL

his Gould 2400S Series Recorder has been ccurately calibrated and adjusted before shipment om the factory, and should give long trouble ee service. For servicing beyond the scope of the structions contained in this manual or the echnical equipment available, contact your earest Gould Service Engineer listed on the arranty card shipped with the recorder.

he following parts lists and schematic diagrams re designed to assist in servicing and repairing the ecorder. For replacement parts, refer to the ppropriate Figure and Parts List that follow. The ems listed do not necessarily imply they are rocurable. If an item is marked with an asterisk *), it is not procurable.

o assure prompt and satisfactory delivery of eplacement parts, include the following infor- nation with your purchase order:

1. Name and model number of the instrument.
2. Description of part as listed in this manual.
3. Gould part number.

**NOTE: Do not use the SYMBOL NUMBER from the parts list for identifying desired parts on the order.**

## 6.2 PARTS USED ON OTHER MODELS

The USED ON column identifies the recorder on which the part is used. If on code is not present, part is common to all models. Below are the codes and explanations:

| CODE | EXPLANATION |
|---|---|
| 250-2 | 250mm chassis, 2 channel |
| 250-3 | 250mm chassis, 3 channel |
| 250-4 | 250mm chassis, 4 channel |
| 250-XP | 250mm chassis, (X) channel with preamps |

EXPLODED VIEW PARTS LIST
2400S SERIES RECORDER – ALL PORTABLE MODELS
FIGURE 6-1

| ITEM NUMBER | PART NUMBER | DESCRIPTION | USED ON |
|---|---|---|---|
| | 2107-42XX-XX | 2400S Recorder, 2 Channel | |
| | 2107-43XX-XX | 2400S Recorder, 3 Channel | |
| | 2107-44XX-XX | 2400S Recorder, 4 Channel | |
| 1 | 2107-4290-XX | Recorder Assy, 2 Channel (See Fig. 6-3) | 250-2&2P |
| | 2107-4390-XX | Recorder Assy, 3 Channel (See Fig. 6-3) | 250-3&3P |
| | 2107-4490-XX | Recorder Assy, 4 Channel (See Fig. 6-3) | 250-4&4P |
| 2 | 886569 | Case Assy, Recorder (See Fig. 6-15) | 250-2, 3, & 4 |
| | 886492 | Case Assy, Recorder, 2 Ch. (See Fig. 6-15) | 250-2P |
| | 886399 | Case Assy, Recorder, 3 & 4 Ch. (See Fig. 6-15) | 250-3P & 4P |
| 3 | 292819 | Shim (Not Shown)* | |
| 4 | 292818 | Spacer (Not Shown)* | 250-XP |
| 5 | 888321 | Cage Assy, Preamp, 2 Ch. (See Fig. 6-16) | 250-2P |
| | 895046 | Cage Assy, Preamp, 3 & 4 Ch. (See Fig. 6-16) | 250-3P&4P |
| 6 | 887005 | Panel Assy | 250-3P |
| 7 | 11-6402-11 | Chart Takeup Assy (See Fig. 6-17) | |

*Shim location. Top flange of side plates. One each plate.
*Spacer location. Top of preamp cage.

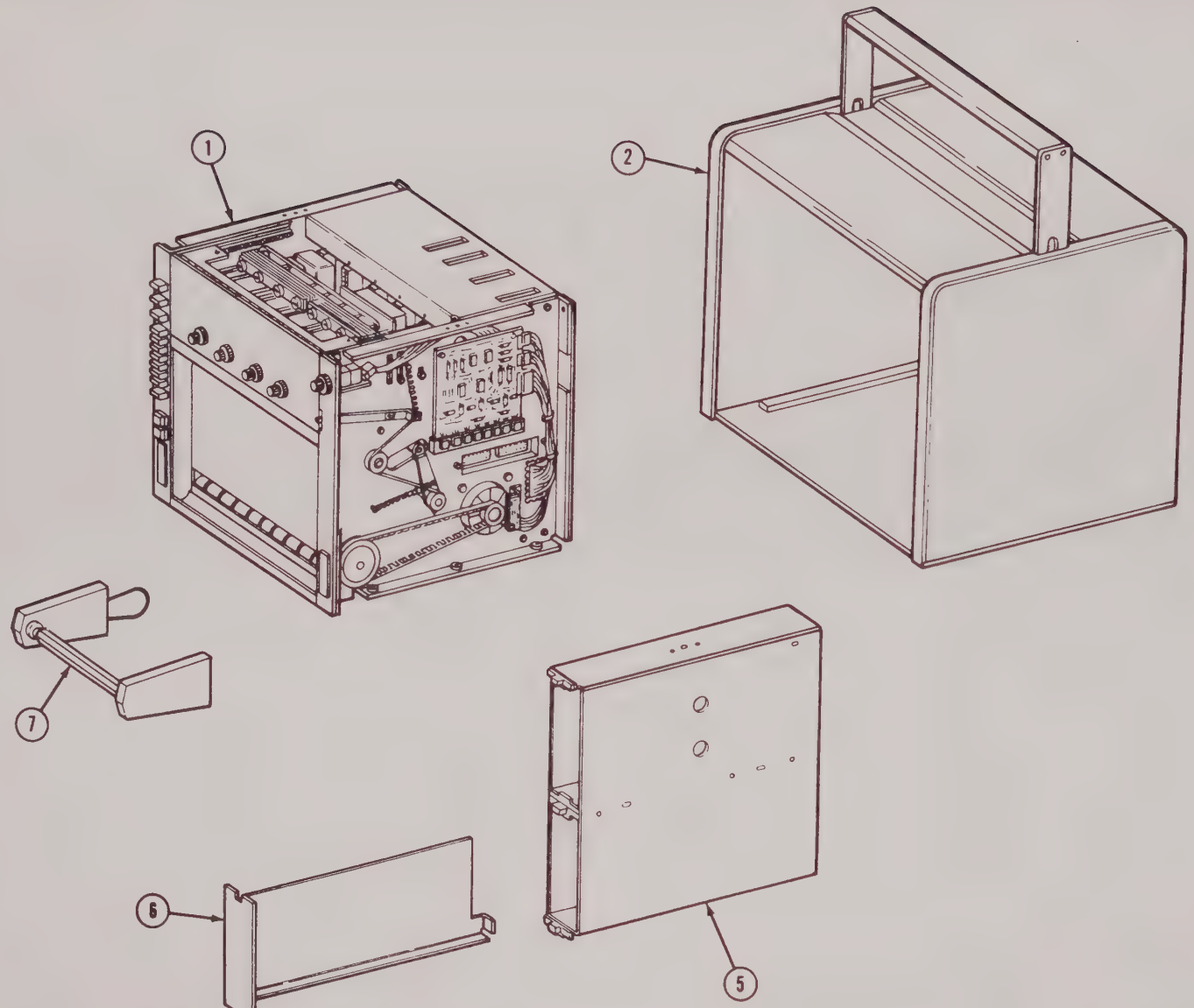


FIGURE 6-1 2400S SERIES RECRODER, PORTABLE

EXPLODED VIEW PARTS LIST
2400S SERIES RECORDER – RACK MOUNTED MODELS
FIGURE 6-2

| ITEM NO | PART NUMBER | DESCRIPTION | USED ON |
|---|---|---|---|
| | 2107-42XX-XX | 2400S Recorder, 2 Channel | |
| | 2107-43XX-XX | 2400S Recorder, 3 Channel | |
| | 2107-44XX-XX | 2400S Recorder, 4 Channel | |
| 1 | 2107-4290-XX | Recorder Assy, 2 Chan. (See Fig. 6-3 and 6-4) | 250-2&2P |
| | 2107-4390-XX | Recorder Assy, 3 Chan. (See Fig. 6-3 and 6-4) | 250-3&3P |
| | 2107-4490-XX | Recorder Assy, 4 Chan (See Fig. 6-3 and 6-4) | 250-4&4P |
| 2 | 467037 | Frame, Shipping | |
| 3 | 11-1154-61 | Cabinet Assembly | |
| 4 | 887005 | Panel Assembly | 250-3P |
| 5 | 888321 | Cage Assy, Preamp (See Fig. 6-16) | 250-2P |
| | 895046 | Cage Assy, Preamp (See Fig. 6-16) | 250-3P & 4P |
| 6 | 11-6402-11 | Chart Take-up Assy (See Fig. 6-17) | |
| Not Shown | ** 687330 | Kit Assy, Model 11-1202-11 (See Fig. 6-23) (Rack Mount Installation Instructions, Recorder only.) | |
| Not Shown | ** 687363 | Kit Assy, Model 11-1202-12 (See Fig. 6-24) (Rack Mount Installation Instructions, Recorder with 2-preamp cage). | |
| Not Shown | ** 687361 | Kit Assy, Model 11-1202-13 (See Fig. 6-25) (Rack Mount Installation Instructions, Recorder with 4-preamp cage) | |

**Use Kit Model number for ordering purposes.

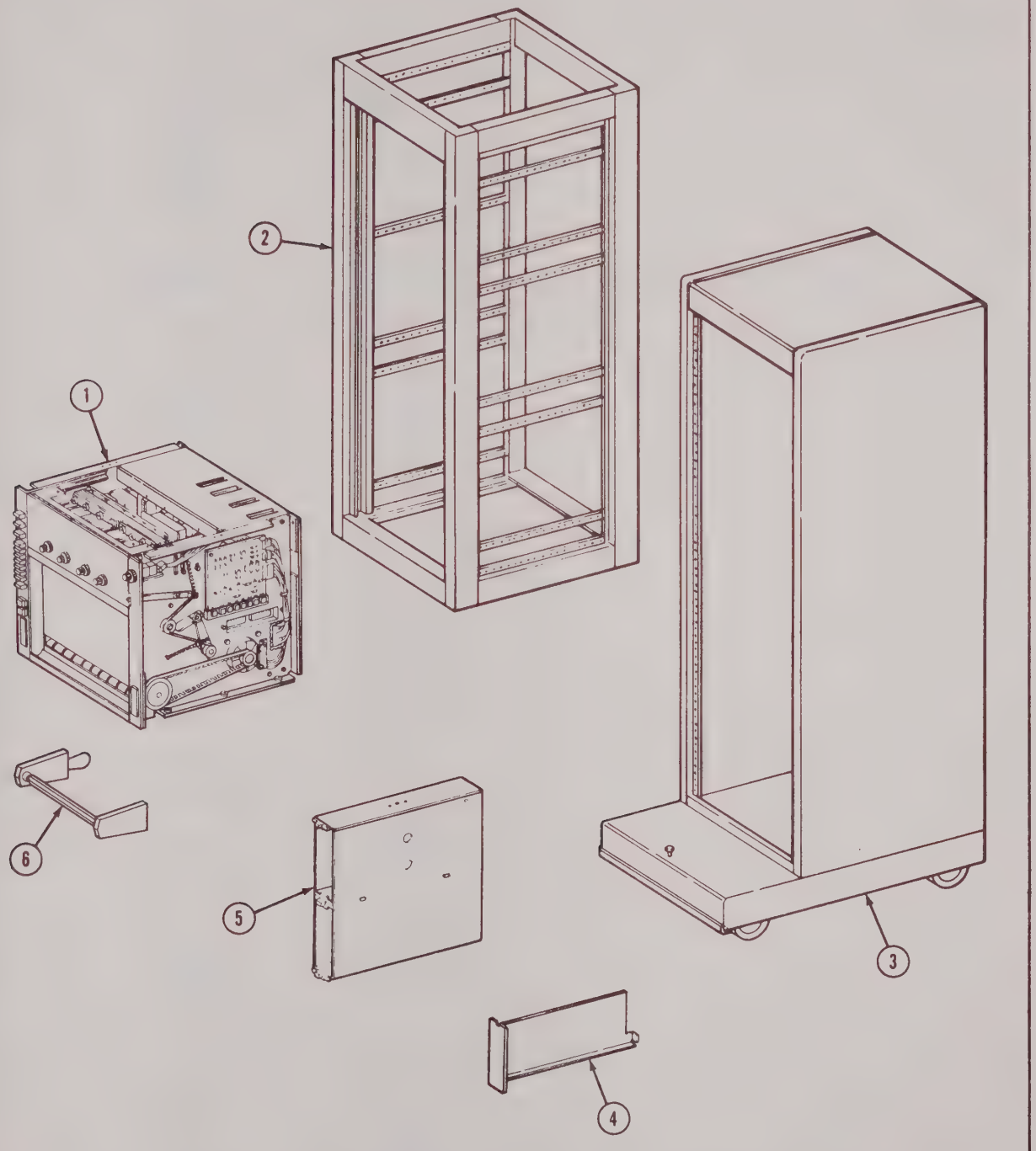


FIGURE 6-2 2400S SERIES RECORDER, RACK MOUNTED MODELS

| ITEM NUMBER | PART NUMBER | DESCRIPTION | SYMBOL NUMBER | USED ON |
|---|---|---|---|---|
| | 2107-4X90-XX | Recorder Assembly | | |
| 1 | 248169-2 | Spacer | | |
| 2 | 242461-45 | Nut | | |
| 3 | 294518 | Insulator, Speed Select | | |
| 4 | 694371-19 | Cable Assy., Flat | | |
| 4A | 295145-3 | Connector | | |
| 5 | 694371-18 | Cable Assy., Flat | | |
| 6 | 694371-17 | Cable Assy., Flat | | |
| 7 | 893620-1 | Board Assembly, Speed Select (See Fig. 6-5) A-110 (A-P) | | |
| | 31-119918-4004 | Screw | | |
| | 1-118195-304 | Washer | | |
| | | –––––*––––– | | |
| 8 | 894779-1 | Connector Assy. | | |
| 8A | 1-283408-1 | Contact (A-P) | | |
| | 31-119918-6204 | Screw | | |
| | 13-262716-4008 | Screw | | |
| | | –––––*––––– | | |
| 9 | 694371-20 | Cable Assy., Flat | | |
| 9A | 694371-4 | Cable Assy., Flat | | |
| 10 | 893617 | Board Assy., Processor (A-P) | | |
| | 31-119918-6206 | Screw | | |
| | 1-216741-420 | Lockwasher, Spring | | |
| | | –––––*––––– | | |
| 11 | 294545 | Insulator, Processor | | |
| 12 | 886573 | Manifold Assy. (A-P) | | |
| | 1-118195-305 | Washer | | |
| | 1-216741-420 | Lockwasher, Spring | | |
| | 31-119918-6205 | Screw | | |
| | | –––––*––––– | | |
| 13 | 894754 | Cover Assy., Rear (A-P) | | |
| | 13-262716-4004 | Screw | | |
| | 1-120052-203 | Lockwasher, Int. Tooth | | |
| | | –––––*––––– | | |
| 14 | 1-280875-8 | Spacer, Threaded | | |
| 15 | 289225-2 | Shield (A-P) | | |
| | 31-119918-4004 | Screw | | |
| | 1-120052-203 | Lockwasher, Int. Tooth | | |
| | | –––––*––––– | | |
| 16 | 1-286155-16 | Board, Terminal | | |
| 17 | 129699 | Jumper | | |
| 17A | 245538 | Connector | | |
| | 694917 | Power Recep. Assy. | | |
| 18 | 294995 | Filter, RFI | | |
| 19 | 241026-2 | Terminal Lug | | |
| 20 | 265840-2 | Terminal Lug | | |

| ITEM NUMBER | PART NUMBER | DESCRIPTION | SYMBOL NUMBER | USED ON |
|---|---|---|---|---|
| 21 | 124804-5 | Clamp | | |
| | | (A-P) | | |
| | | ------*------ | | |
| 22 | 294546 | Insulator, Sw. Amp | | |
| 23 | 89361-8 | Board Assy, Sw. Amp (See Fig. 6-20) | | |
| | | (A-P) | | |
| | 1-216741-420 | Lockwasher, Spring | | |
| | 31-119918-6206 | Screw | | |
| | 13-262715-4003 | Screw, Fl. Hd. | | |
| | | ------*------ | | |
| 24 | 694371-8 | Cable Assy, Flat | | |
| 25 | 894133 | Board Assy, Sensor (See Fig. 6-13) | | |
| | | (A-P) | | |
| | 31-119918-4004 | Screw | | |
| | 1-118195-304 | Washer | | |
| | 1-120052-203 | Lockwasher, Int. Tooth | | |
| | | ------*------ | | |
| 26 | 294161 | Insulator, Heat Sink | | |
| 27 | 286592 | Spring | | |
| 28 | 243542-3 | Belt, Timing | | |
| 29 | 694520 | Pulley, Modified | | |
| | | (A-P) | | |
| | 14-119923-6203 | Screw, Set | | |
| | | ------*------ | | |
| 30 | 694293 | Brake Assy | | |
| | | (A-P) | | |
| | 31-119923-0204 | Screw, Set | | |
| | 31-119918-4003 | Screw | | |
| | | ------*------ | | |
| 31 | 286531 | Spring | | |
| 32 | 127271 | Washer | | |
| 33 | 123913 | Washer, Spacer | | |
| 34 | 265741-1 | Bearing, Ball | | |
| 35 | 265745-1 | Washer, Mylar | | |
| 36 | 785745 | Shaft Assy, Supply | | |
| 37 | 785718 | Flange Assy, Supply | | |
| 38 | 885748-1 | Table Assy, Writing | | |
| | | (A-P) | | |
| | 127271 | Washer | | |
| | 1-227070-9 | Ring, Ret. | | |
| | | ------*------ | | |
| 39 | 685196-1 | Lampholder Assy | | |
| 40 | 285765-4 | Lamp | | |
| 41 | 285764-4 | Lens | | |
| 42 | 285764-1 | Lens | | |
| 43 | 685196-2 | Lampholder Assy | | |
| 44 | 2-240731-10 | Ring, Ret. Ext. | | |
| 45 | 285711 | Spring | | |

| ITEM NUMBER | PART NUMBER | DESCRIPTION | SYMBOL NUMBER | USED ON |
|---|---|---|---|---|
| | | SHEET II | | |
| 46 | 793171 | Panel Assy, Ft. L.H. (794938 on Flip-Top models 2108-8893-XX) (A-P) | | |
| | 243898-02 | Nut Assy | | |
| | | ------*------ | | |
| 47 | 286770 | Cover, Panel | | |
| 48 | 894284-1 | Plate Assy, L. H. | | |
| 49 | 11-2730-01 | Ink Cartridge* | | |
| 50 | 285651-3 | Knob | | |
| 51 | 694245 | Knob Assy, Locking | | |
| 52 | 794898-1 | Door Assy (4 Channel) 21XX-44XX-XX | | 250-4 |
| | 794898-2 | Door Assy (2 Channel) 21XX-42XX-XX | | 250-2 |
| | 794898-3 | Door Assy (3 Channel) 21XX-43XX-XX | | 250-3 |
| | 286316-1 | Cover (Clear Plastic Strip) | | |
| 53 | 386274 | Slide (A-P) | | |
| | 13-262716-6204 | Screw | | |
| | | ------*------ | | |
| 54 | 886033 | Bracket Assy, Top (A-P) | | |
| | 31-126906-405 | Screw | | |
| | | ------*------ | | |
| 55 | 886220 | Board Assy, Dr. Amp (See Fig. 6-8) | | |
| 56 | 894131 | Board Assy, Control (See Fig. 6-7) (A-P for 88 & 87) | | |
| | 1-120053-201 | Lockwasher, Ext. | | |
| | 31-119918-4006 | Screw | | |
| | | ------*------ | | |
| 57 | 691288 | Jumper Assy | | |
| 58 | 243225-4 | Clamp, Loop | | |
| 59 | 494765 | Board P.C. AC Distr. | | |
| 60 | 894286 | Board Assy, AC Distr. (A-P) | | |
| | 31-119918-4007 | Screw | | |
| | 31-119918-4003 | Screw | | |
| | | ------*------ | | |
| 61 | 1-280875-13 | Spacer, Threaded | | |
| 62 | 394756 | Support, Bar (A-P) | | |
| | 31-119918-6210 | Screw | | |
| | 1-216741-420 | Lockwasher, Spring | | |
| | | ------*------ | | |
| 63 | 886031 | Bracket Assy, Bottom (A-P) | | |
| | 13-262716-8206 | Screw | | |
| | | ------*------ | | |
| 64 | 265840-1 | Terminal Lug | | |
| 65 | 241513-206 | Capacitor | | |

*WARNING: THE INK PLUNGER ASSY. CONTAINS A COMPRESSED SPRING WHICH COULD BE HAZARDOUS. DO NOT TAKE APART. USE CAUTION WHEN HANDLING.

| ITEM NUMBER | PART NUMBER | DESCRIPTION | SYMBOL NUMBER | USED ON |
|---|---|---|---|---|
| 66 | 794292-[illegible] | Wire Assy | | |
| | | (A-P) | | |
| | 31-119918-6206 | Screw | | |
| | 243898-62 | Nut Assy | | |
| | | ——— * ——— | | |
| 67 | 265814-6 | Terminal Board | TB102 | |
| | | (A-P) | | |
| | 13-262716-4006 | Screw | | |
| | | ——— * ——— | | |
| 68 | 285357-1 | Shaft | | |
| 69 | [illegible] | Strap, Retaining | | |
| 70 | 783590 | Sensor Assy | | |
| | 694405 | Stepper Motor Assy | | |
| | | (A-P) | | |
| | 243898-82 | Nut | | |
| | | ——— * ——— | | |
| 71 | 694552 | Motor, Stepper | | |
| 72 | 1-232008-23 | Strap, Retaining | | |
| 73 | 281502-1 | Contact | | |
| 74 | 9-281501-8 | Connector | | |
| 75 | [illegible] | Mount, Shock | | |
| | | (A-P) | | |
| | 243898-82 | Nut | | |
| | | ——— * ——— | | |
| 76 | 894287-1 | Plate Assy, R.H. | | |
| 77 | [illegible] | Damper Assy | | |
| 78 | 893621 | Board Assy, Variable Speed | | |
| | | (A-P) | | |
| | 1-293279-1 | Nut, Plant, Hex | | |
| | | ——— * ——— | | |
| 79 | 295651-16 | Knob | | |
| 80 | [illegible] | Panel Assy, R.H. Front (794937 on Flip-Top Models 2108-8893-XX) | | |
| | | (A-P) | | |
| | 243898-02 | Nut Assy | | |
| | | ——— * ——— | | |
| 81 | 893619 | Board Assy, Power Supply | | |
| | | (A-P) | | |
| | 13-119918-6206 | Screw | | |
| | [illegible] | Lockwasher, Spring | | |
| | | ——— * ——— | | |
| 82 | 286484 | Bracket | | |
| | | (A-P) | | |
| | [illegible] | Screw | | |
| | | ——— * ——— | | |
| 83 | 494711 | Chassis, Bottom | | |
| | | (A-P) | | |
| | [illegible] | Screw | | |
| | | ——— * ——— | | |

| ITEM NUMBER | PART NUMBER | DESCRIPTION | SYMBOL NUMBER | USED ON |
|---|---|---|---|---|
| | 694512 | Transformer Assy, Power (A-P) | | |
| | 31-119918-0208 | Screw | | |
| | 245244-02 | Nut | | |
| | | –––––*––––– | | |
| 84 | 294305 | Transformer, Power | | |
| 85 | 9-270158-56 | Connector | | |
| 86 | 270153-1 | Contact | | |
| 87 | 232997-23 | Strap, Retaining | | |
| | 794513 | Transformer Assy, Control (A-P) | | |
| | 243898-82 | Nut | | |
| | 31-119918-2206 | Screw | | |
| | | –––––*––––– | | |
| 88 | 294073 | Transformer, Control | T109 | |
| 89 | 1-232997-23 | Strap, Retaining | | |
| 90 | 270153-1 | Contact | | |
| 91 | 9-270158-56 | Connector | | |
| 92 | 281502-1 | Contact | | |
| 93 | 9-281501-6 | Connector | | |
| 94 | 685719-1 | Roll, Drive | | |
| 95 | 267426-1 | Paper, Deflector | | |
| 96 | 785701-1 | Chute, Paper (A-P) | | |
| | 13-262716-8206 | Screw | | |
| | | –––––*––––– | | |
| 97 | 785169 | Bar Assy, Pen Motor 4 Channel (See Figure 6-10) | | |
| | 785171 | Bar Assy, Pen Motor 2 Channel (See Figure 6-10) | | |
| | 785175 | Bar Assy, Pen Motor 3 Channel (See Figure 6-10) (A-P) | | |
| | 1-216741-425 | Lockwasher, Spring | | |
| | 20-119922-8206 | Screw, Cap | | |
| | | –––––*––––– | | |
| 98 | 687477-1 | Tube Assy | | |
| 99 | 885090 | Pen Assy | | |
| 100 | 887181 | Event Marker Assy | | |
| 101 | 667277 | Tube | | |
| 102 | 243225-6 | Clamp (A-P) | | |
| | 243898-40 | Nut | | |
| | 1-118195-304 | Washer | | |
| | 31-119918-4006 | Screw | | |
| | | –––––*––––– | | |
| 103 | 691288 | Jumper Assy | | |
| 104 | 116198-6 | Fuse | | |
| | 116198-10 | Fuse | | |
| | 116198-11 | Fuse | | |
| | 116198-8 | Fuse | | |
| | 116198-7 | Fuse | | |
| | 116198-9 | Fuse | | |

| ITEM NUMBER | PART NUMBER | DESCRIPTION | SYMBOL NUMBER | USED ON |
|---|---|---|---|---|
| 105 | 291067 | Cable Assy, Power | P101 | |
| 106 | 114816-15 | Plug | P201 | |
| 107 | 289046 | Plug | P202 | |

TABLE 6-1 FUSE TABLE (ITEM 112)

| RECORDER FUSE TABLE | | | | |
|---|---|---|---|---|
| Fuse Symbol | For-00 | For-01 | For-06 | For-07 |
| F701 thru F708 | 1A 250V | 1-1/2A 250V | 1/2A 250V | 3/4A 250V |
| F709 | 3/4A 250V | 3/4A 250V | 3/8A 250V | 1/2A 250V |
| F711/W2 Ink Solenoids | 1/4A 250V | 1/4A 250V | 1/4A 250V | 1/4A 250V |
| F711 W/1 Ink Solenoid | 1/8A 250V | 1/8A 250V | 1/8A 250V | 1/8A 250V |

LINE VOLTAGE

00 = 115V  01 = 100V  06 = 230V  07 = 200V

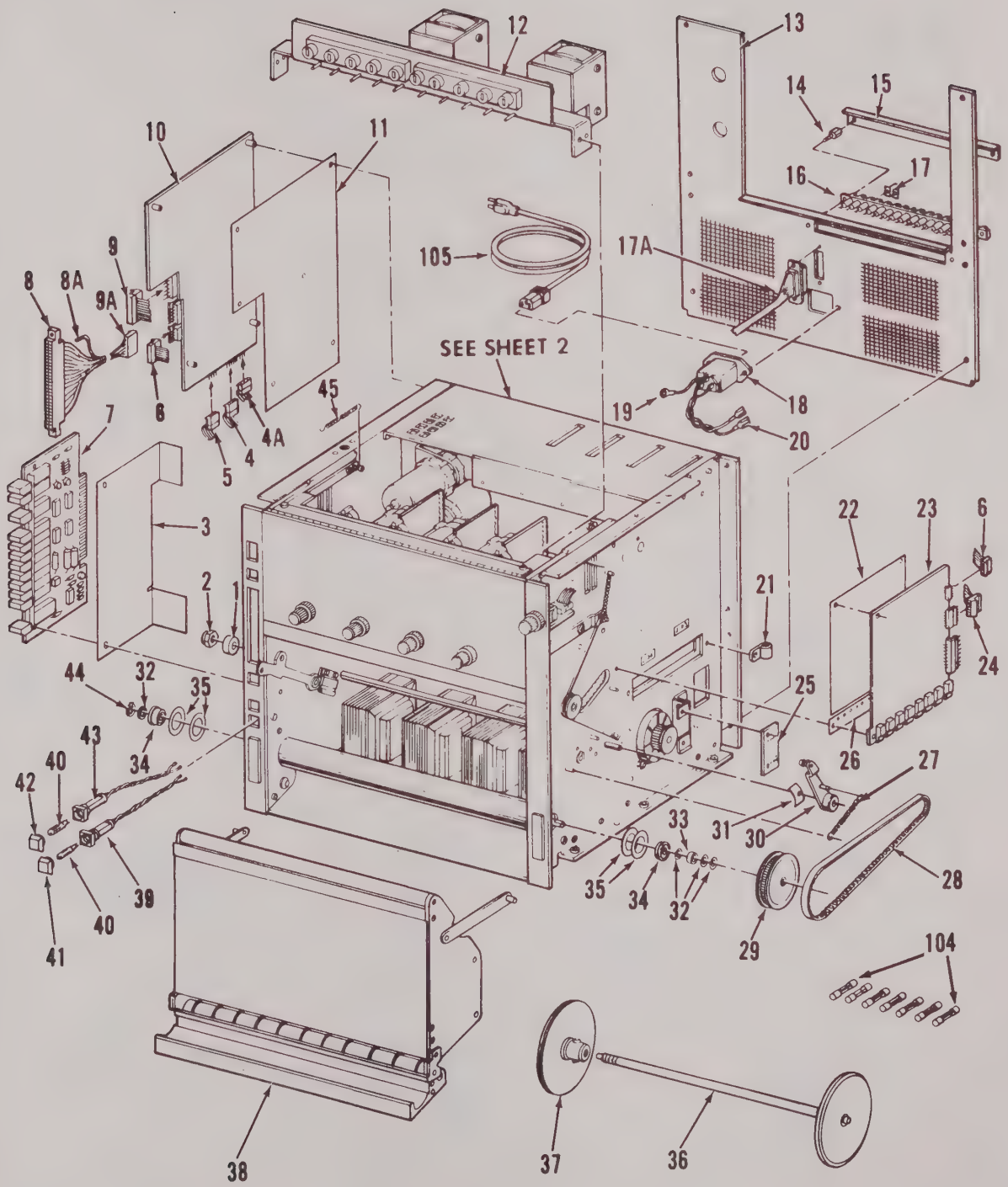


FIGURE 6-3 2400S SERIES RECORDER – ALL MODELS
RECORDER ASSEMBLY – 250MM CHASSIS – MODEL NO. 2107-4X90-XX

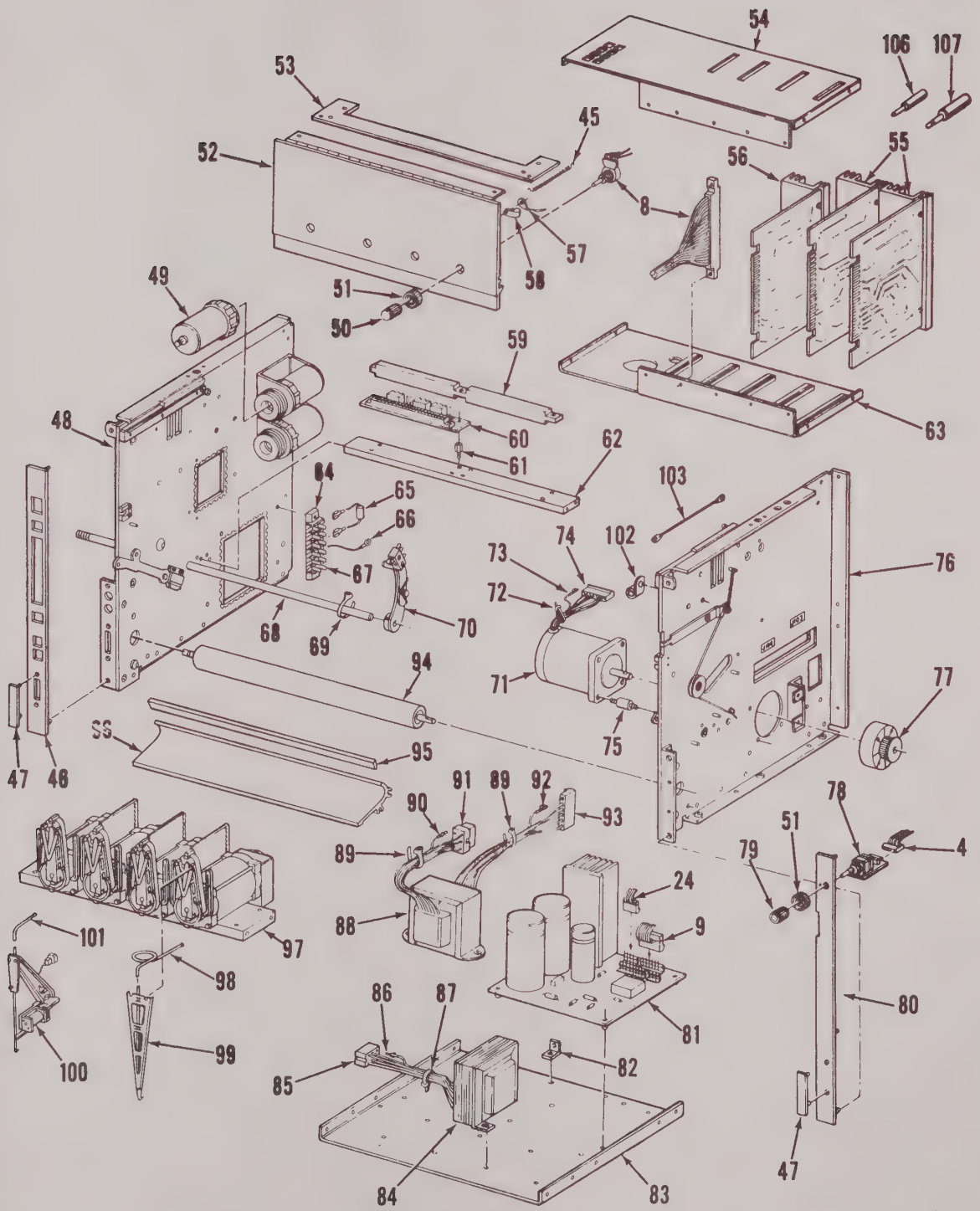


FIGURE 6-4 2400S SERIES RECORDER – ALL MODELS
RECORDER ASSEMBLY – 250MM CHASSIS – MODEL NO. 2107-4X90-XX

EXPLODED VIEW PARTS LIST
2400S SERIES RECORDER – ALL MODELS
BOARD ASSY SPEED SELECT – 893620
FIGURE 6-5

| ITEM NUMBER | PART NUMBER | DESCRIPTION | USED ON |
|---|---|---|---|
| 1 | 786080-10 | Left Event Button | |
| 2 | 786080-11 | Right Event Button | |
| 3 | 786080-9 | Button Divide by 100 | ÷100 |
| 4 | 786080-8 | Button 200 | |
| 5 | 786080-7 | Button 100 | |
| 6 | 786080-6 | Button 50 | |
| 7 | 786080-5 | Button 25 | |
| 8 | 786080-4 | Button 10 | |
| 9 | 786080-3 | Button 5 | |
| 10 | 786080-41 | Button Ext. | |
| 11 | 786080-2 | Button Stop | |
| 12 | 786080-1 | Button Power | |

EXPLODED VIEW PARTS LIST CONT'D
2400S SERIES RECORDER – ALL MODELS
BOARD ASSY SPEED SELECT – 893620
FIGURE 6-5

| SYMBOL NUMBER | PART NUMBER | DESCRIPTION |
|---|---|---|
| C601 | 20-290244-107 | Capacitor 100μfd @ 10V |
| C602 | 10-125904-472 | Capacitor 0047μfd @ 100V |
| C603, 605 | 288755-104 | Capacitor .1μfd @ 50V |
| C604 | 128020-256 | Capacitor 25μfd @ 50V |
| C606 | 10-290244-475 | Capacitor 4.7μfd @ 10V |
| C607 | 288755-473 | Capacitor .047μfd @ 50V |
| C608 | 240352-101 | Capacitor 100μμfd @ 1KV |
| CR601-606 | 280440 | Diode IN4148 |
| CR609, 610 | 280440 | Diode IN4148 |
| CR607 | 282295-8 | Bridge Rect. VE 18X |
| CR608 | 269256-7 | Diode IN4148 |
| Q601-603 | 286141 | Transistor 2N3904 |
| Q607, 608 | 286141 | Transistor 2N3904 |
| Q604, 605 | 286143 | Transistor 2N3906 |
| Q606 | 291230 | Trial 2N6155 |
| R601-613 | 5-241111-102 | Resistor 1K ohm |
| R618-638 | 5-241111-102 | Resistor 1K ohm |
| R641 | 5-241111-102 | Resistor 1K ohm |
| R614, 615 | 5-241111-512 | Resistor 5.1K ohm |
| R617, 625 | 5-241111-512 | Resistor 5.1K ohm |
| R616 | 5-241111-273 | Resistor 27K ohm |
| R620 | 5-241111-153 | Resistor 15K ohm |
| R621 | 5-241111-111 | Resistor 110K ohm |
| R622 | 5-241111-132 | Resistor 1.3K ohm |
| R619, 634 | 5-241111-103 | Resistor 10K ohm |
| R636 | 5-241111-103 | Resistor 10K ohm |
| R624 | 5-241111-332 | Resistor 3.3K ohm |

EXPLODED VIEW PARTS LIST
2400S SERIES RECORDER – ALL MODELS
BOARD ASSY SPEED SELECT – 893620 (CONT'D)
FIGURE 6-5

| SYMBOL NUMBER | PART NUMBER | DESCRIPTION |
|---|---|---|
| R627 | 5-24111-221 | Resistor 220 ohm |
| R623 | 5-241111-753 | Resistor 75K ohm |
| R628 | 5-241111-622 | Resistor 6.2K ohm |
| R626 | 5-241111-912 | Resistor 9.1K ohm |
| R629, 630 | 5-242300-512 | Resistor 5.1K ohm |
| R632 | 5-241111-824 | Resistor 820K ohm |
| R633 | 5-241111-823 | Resistor 82K ohm |
| R635 | 5-241111-203 | Resistor 20K ohm |
| R637 | 5-241111-272 | Resistor 2.7K ohm |
| R639 | 5-241111-271 | Resistor 270 ohm |
| S601 | 292898 | Switch Assy Pushbutton |
| E1-E4 | 265763-2 | Contact |
| U601 | 290169-10 | Integ. Ckt. 74LS10 |
| U602, 604 | 290169-157 | Integ. Ckt. 74LS157 |
| U603 | 290169-04 | Integ. Ckt. 74LS04 |
| U606 | 286146 | Integ. Ckt. LM339 |
| U605 | 285589 | Isolator, LED 4N28 |
| U607 | 287613 | Integ. Ckt. NE555 |
| | 493620 | Board P.C. |

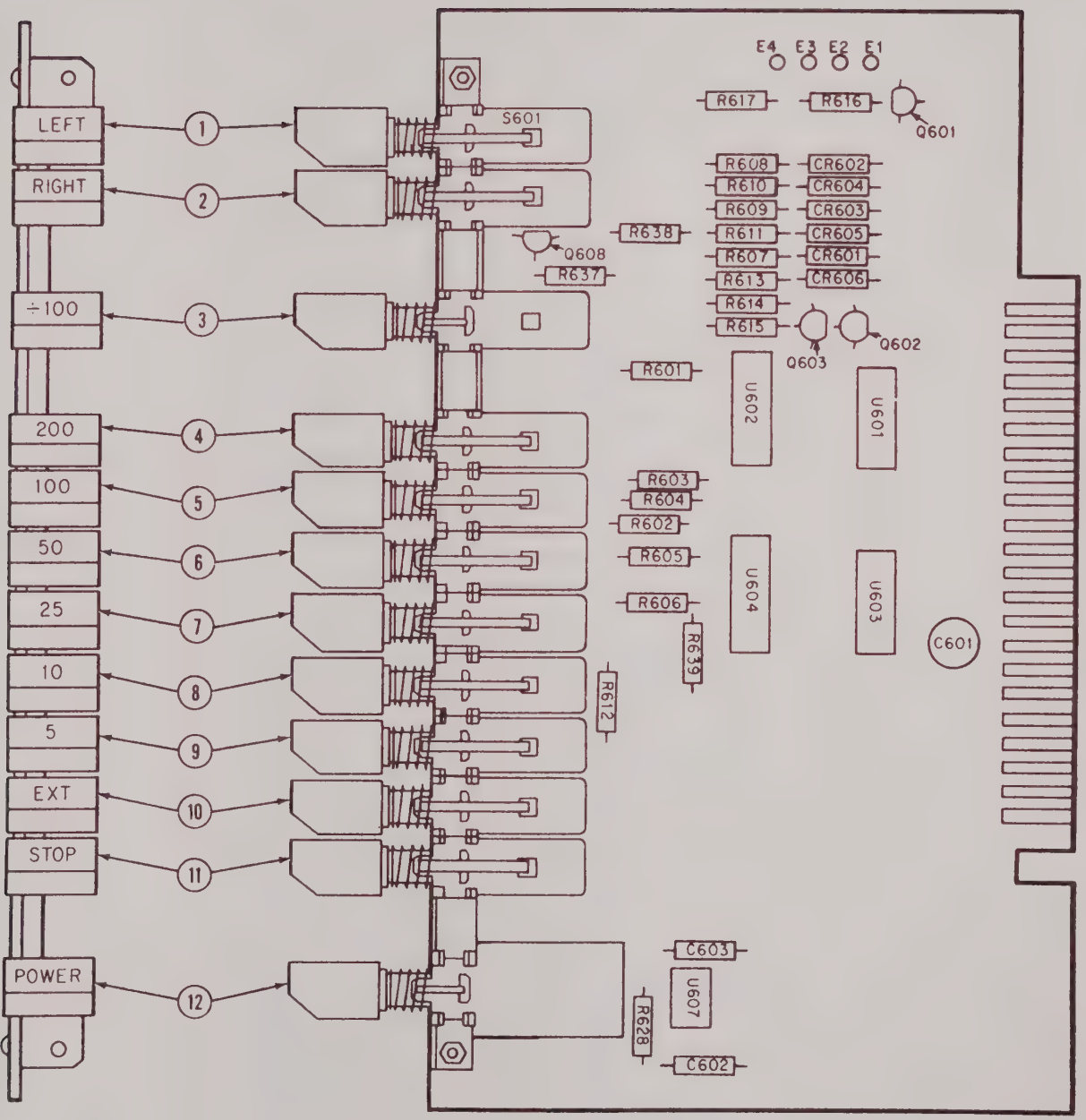


FIGURE 6-5 SPEED SELECT BOARD ASSY

2400S INK WRITING RECORDER – ALL MODELS
L.H. PLATE ASSEMBLY – 894284
FIGURE 6-6

| ITEM NUMBER | PART NUMBER | DESCRIPTION |
|---|---|---|
| 1 | 385619 | Bracket, Conn. (A-P) |
| | 13-262716-4004 | Screw |
| | | ——————*—————— |
| 2 | 1-265849-4 | Bracket (A-P) |
| | 31-119920-6204 | Screw |
| | | ——————*—————— |
| 3 | 385543-2 | Guide (A-P) |
| | 31-126906-405 | Screw |
| | | ——————*—————— |
| 4 | 13-262716-4006 | Screw |
| 5 | 766243 | Ink Plunger Assy. (A-P) |
| | 31-119918-4004 | Screw |
| | 1-216741-411 | Lockwasher |
| | | ——————*—————— |
| 6 | 2-128693-3 | Grommet |
| 7 | 243623 | Spring (A-P) |
| | 13-262716-6204 | Screw |
| | | ——————*—————— |
| 8 | 243622 | Pad, Friction (A-P) |
| | 13-262716-6204 | Screw |
| | | ——————*—————— |
| 9 | 243611-910 | Lever Assy. (A-P) |
| | 127271 | Washer |
| | 1-227070-9 | Ring, Retaining |
| | | ——————*—————— |
| 10 | 285929 | Bracket, L.H. (A-P) |
| | 31-119920-6204 | Screw |
| | | ——————*—————— |
| 11 | 285599-1 | Catch (A-P) |
| | 13-262716-4005 | Screw |
| | | ——————*—————— |
| | 894132 | Plate, Subassembly |
| 12 | 1-123253-1401 | Spacer |
| 13 | 294254 | Rivet |
| 14 | 3-129275-105 | Nut, Clinch |
| 15 | 240161-310 | Pin |
| 16 | 243440 | Bumper |
| 17 | 243507-2 | Button, Detent (A-P) |
| | 1-127657-5 | Ring, Retaining |
| | 128348 | Washer |
| | | ——————*—————— |
| 18 | 2-129275-102 | Nut, Clinch |
| 19 | 494130 | Plate, Side. L.H. |

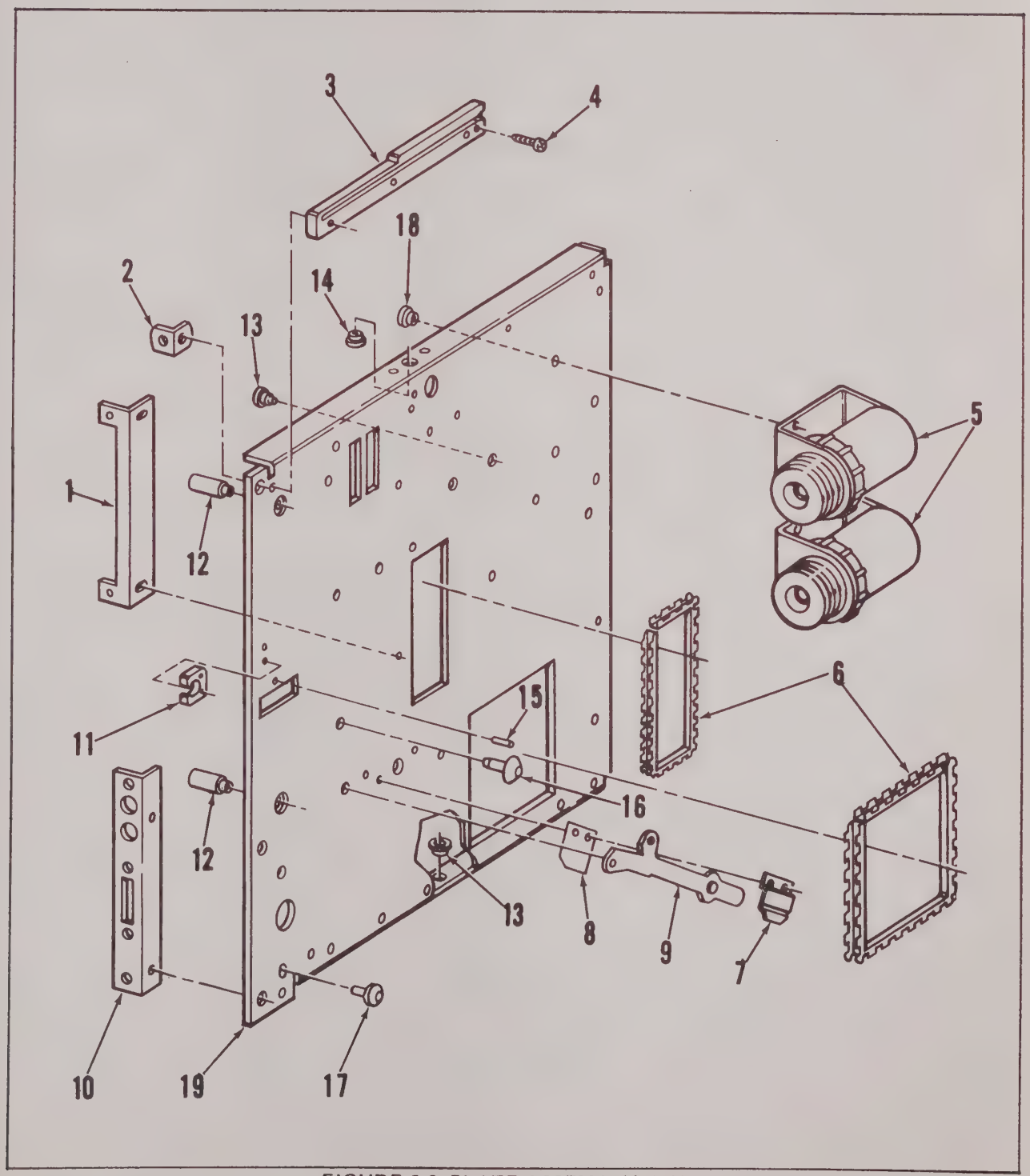


FIGURE 6-6 PLATE ASSEMBLY, L.H.

2400S INK WRITING RECORDER - All Models
CONTROL TIMER BOARD ASSEMBLY - 894131 (Schematic 294131)
FIGURE 6-7

| SYMBOL NUMBER | PART NUMBER | DESCRIPTION |
|---|---|---|
| C701 | 243037-257 | Capacitor, 250 μfd |
| C702 | 20-290244-107 | Capacitor, 100 μfd |
| C703, C704 | 288755-104 | Capacitor, .1 μfd |
| C705 | 262585-475 | Capacitor, 4.7 μfd |
| C706 | 288755-104 | Capacitor, .1 μfd |
| C707 | 243037-257 | Capacitor, 250 μfd |
| C708, C709 | 294069-104 | Capacitor, .1 μfd |
| C710 | 287614-102 | Capacitor, .001 μfd |
| CR701 | 286018-2 | Diode, KBP04 |
| CR702 | 286018-1 | Diode, KBP02 |
| CR703 | 269256-7 | Diode, 1N4007 |
| CR704 | 280440 | Diode, 1N4148 |
| CR705 | 269256-7 | Diode, 1N4007 |
| K701 | 291310-24 | Relay |
| Q701 | 286143 | Transistor, 2N3906 |
| Q702 | 292538-2 | Transistor, 2N6427 |
| Q703 | 286143 | Transistor, 2N3906 |
| Q704 | 292538-2 | Transistor, 2N6427 |
| R701, R702 | 5-241111-332 | Resistor, 3.3 Kohm |
| R703, R704 | 5-241111-472 | Resistor, 4.7 Kohm |
| R705 | 5-241111-102 | Resistor, 1 Kohm |
| R706 | 5-241111-472 | Resistor, 4.7 Kohm |
| R707 | 5-241111-103 | Resistor, 10 Kohm |
| R708, R709 | 5-241111-332 | Resistor, 3.3 Kohm |
| R710 | 5-241111-472 | Resistor, 4.7 Kohm |
| R711 | 5-241111-102 | Resistor, 1 Kohm |
| R712 | 5-241111-472 | Resistor, 4.7 Kohm |
| S701 | 268923 | Switch (Attaching Parts included) |
| SP | 285179 | Switchplate |
| S702 | 286142-8 | Dipswitch |
| U701 | 290169-92 | Integrated Circuit, 74LS92 |
| U702 | 290169-90 | Integrated Circuit, 74LS90 |
| U703 | 290169-390 | Integrated Circuit, 74LS390 |
| U704 | 286016 | Integrated Circuit, 74121 |
| HS | 686397 | Heatsink (A-P) |
| | 31-119918-4004 | Screw |
| | 1-118195-304 | Washer, Plain |
| | 1-216741-411 | Lockwasher |
| | | -- -- -- -- -- * -- -- -- -- -- |
| *FC | 285577 | Fuse Clip |
| Jumper | 267235 | Jumper Circuit |
| E1 thru E4 | 265763-3 | Contact |

*Note: See Table 6-1, Fuse Table, for fuse ratings.

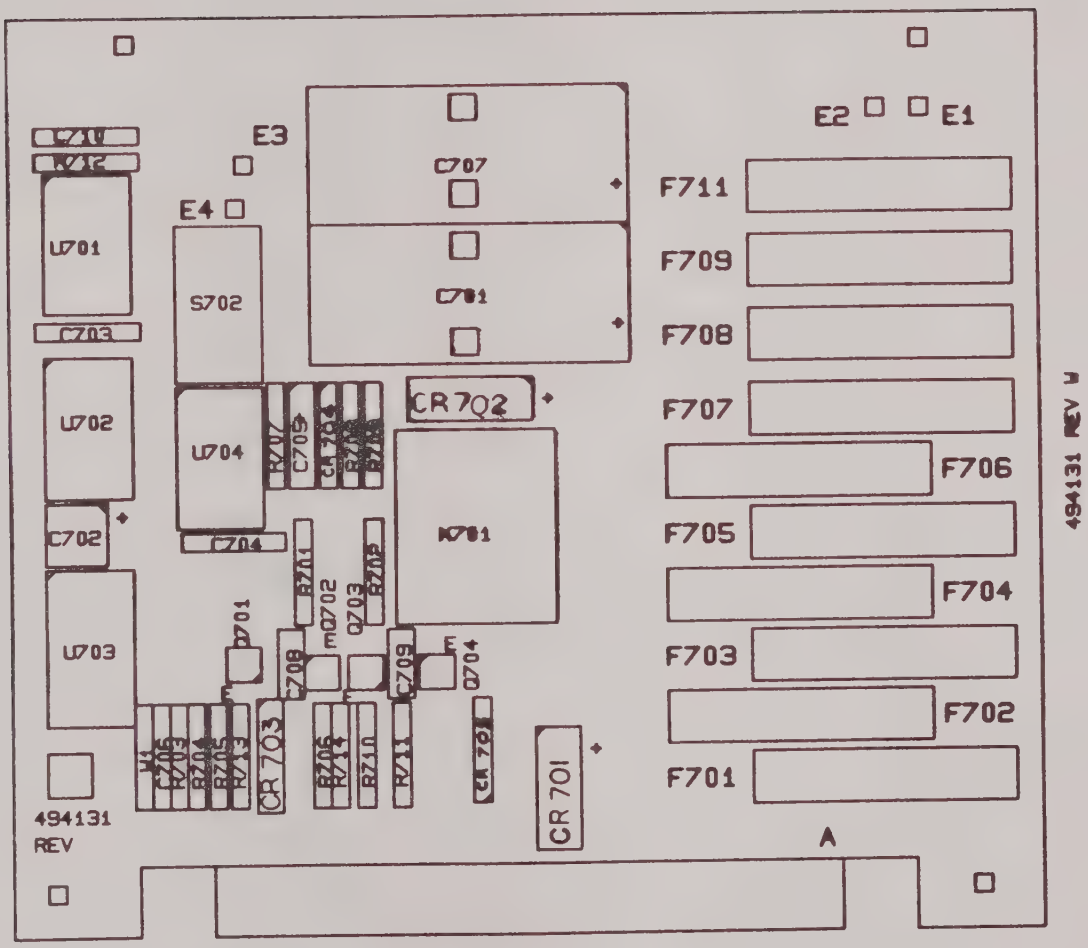


FIGURE 6-7 CONTROL TIMER BOARD ASSY

| SYMBOL NUMBER | PART NUMBER | DESCRIPTION |
|---|---|---|
| C201 | 10-125904-223 | Capacitor |
| C202 | 10-247116-102 | Capacitor |
| C203, 204 | 10-247116-102 | Capacitor |
| C205 | 240352-501 | Capacitor |
| C206 | 10-247116-103 | Capacitor |
| C207 | 240352-501 | Capacitor |
| C208 | 262585-106 | Capacitor |
| C209 | 10-247116-103 | Capacitor |
| C210, 211 | 10-247116-102 | Capacitor |
| C212 | 240352-202 | Capacitor |
| C213 | 10-125904-503 | Capacitor |
| C214 | 10-125904-223 | Capacitor |
| C215 | 281509-507 | Capacitor |
| C216 | 262585-106 | Capacitor |
| C217 | 281509-507 | Capacitor |
| C218 | 262585-106 | Capacitor |
| C219-222 | 286010-108 | Capacitor |
| *C223 | 288755-104 | Capacitor |
| **C224 | 240352-101 | Capacitor, 100pf |
| CR201, 202 | 263727 | Diode, 1N961B |
| CR203-208 | 270508 | Diode, 1N4454 |
| CR209, 210 | 286018-1 | Diode, MDA-101 |
| CR211 | 269256-7 | Diode, 1N4007 |
| CR212 | 270508 | Diode, 1N4454 |
| Q201 | 281703-2 | Transistor, 2N4403 |
| Q202 | 281702-2 | Transistor, 2N4401 |
| Q203-205 | 286141 | Transistor, 2N3904 |
| Q206 | 1-230057-3 | Transistor, 2N4923 |
| Q207 | 1-286145-1 | Transistor, 2N5982 (A-P) |
| | 12-119918-4006 | Screw |
| | | ------*------ |
| Q208 | 1-230058-3 | Transistor, 2N4920 |
| Q209 | 1-286147-1 | Transistor, 2N5985 (A-P) |
| | 12-119918-4006 | Screw |
| | | ------*------ |
| Q210 | 281857-2 | Transistor, 2N5033 |
| R201 | 1-281851-30002 | Resistor |
| R202 | 1-281851-1002 | Resistor |
| R203 | 1-281851-43201 | Resistor |
| R204 | 1-281851-10002 | Resistor |

*Used only in 80mm applications.
**Not in all units.

| SYMBOL NUMBER | PART NUMBER | DESCRIPTION |
|---|---|---|
| R205 | 282299-103 | Resistor |
| R206, 207 | 1-281851-69000 | Resistor |
| R208 | 282299-103 | Resistor |
| R209 | 282299-202 | Resistor |
| R210 | 1-281851-200R0 | Resistor |
| R211 | 1-281851-10002 | Resistor |
| R212, 213 | 1-281851-10001 | Resistor |
| R214 | 1-281851-16601 | Resistor |
| R215, 216 | 1-281851-10000 | Resistor |
| R217, 218 | 1-281851-80000 | Resistor |
| R219 | 1-281851-72001 | Resistor |
| R220 | 1-281851-40000 | Resistor |
| R221 | 1-281851-80001 | Resistor |
| R222 | 1-281851-40001 | Resistor |
| R223, 224 | 5-241111-622 | Resistor |
| R225 | 5-241111-392 | Resistor |
| R226, 227 | 1-281851-50001 | Resistor |
| R228 | 1-281851-10002 | Resistor |
| R229 | 1-281851-60001 | Resistor |
| R230 | 1-281851-60000 | Resistor |
| R231 | 282299-502 | Resistor |
| R232 | 1-281851-500R0 | Resistor |
| R233 | 1-281851-10003 | Resistor |
| R234 | 1-281851-26501 | Resistor |
| R235 | 5-241111-104 | Resistor |
| R236 | 5-241111-203 | Resistor |
| R237 | 5-241111-822 | Resistor |
| R238 | 5-241111-102 | Resistor |
| R239, 240 | 5-241111-202 | Resistor |
| R241 | 5-241111-391 | Resistor |
| R242 | 5-241111-102 | Resistor |
| R243 | 5-286587-181 | Resistor |
| R244 | 5-283654-220 | Resistor |
| R245 | 5-286587-181 | Resistor |
| R246 | 5-241111-102 | Resistor |
| R247 | 1-281851-20001 | Resistor |
| R248 | 1-281851-500R0 | Resistor |
| R249, 250 | 1-281851-80000 | Resistor |
| R251 | 5-241111-104 | Resistor |
| R252, 253 | 5-241111-103 | Resistor |

| SYMBOL NUMBER | PART NUMBER | DESCRIPTION |
|---|---|---|
| R254 | 1-281851-16001 | Resistor |
| R255 | 1-281851-50000 | Resistor |
| R256 | 5-241111-101 | Resistor |
| R257 | 1-281851-20001 | Resistor |
| R258 | Not Used | |
| R259 | 1-281851-40001 | Resistor |
| R260 | 282299-103 | Resistor |
| R261 | Not Used | |
| R262 | 5-241111-104 | Resistor |
| R263, 264 | 5-130340-2R0 | Resistor |
| R265 | 5-241111-822 | Resistor |
| U201-204 | 280863-3 | Integrated Circuit, 741C |
| U205 | 269941-2 | Integrated Circuit, 1439P1 |
| U206 | 280863-3 | Integrated Circuit, 741C |
| U207 | 285461 | Voltage Reg., MC 7815 |
| | | (A-P) |
| | 12-119918-4005 | Screw |
| | | -----*----- |
| U208 | 285778 | Voltage Reg., MC 7915 |
| | | (A-P) |
| | 12-119918-4005 | Screw |
| | | -----*----- |
| U209, 210 | Not Used | |
| U211 | 285589 | Isolator, LED, 4N28 |
| HS | 686391 | Heatsink |
| | | (A-P) |
| | 31-119918-4005 | Screw |
| | 1-118195-304 | Washer |
| | 1-216741-411 | Lockwasher |
| | | -----*----- |
| --- | 685187 | Jack Assembly |
| J201 | 285315 | Jack |
| J202 | 289045 | Jack |
| | | (A-P) |
| | 1-120052-211 | Lockwasher |
| | | -----*----- |
| E1 thru E4 | 265763-3 | Contact |

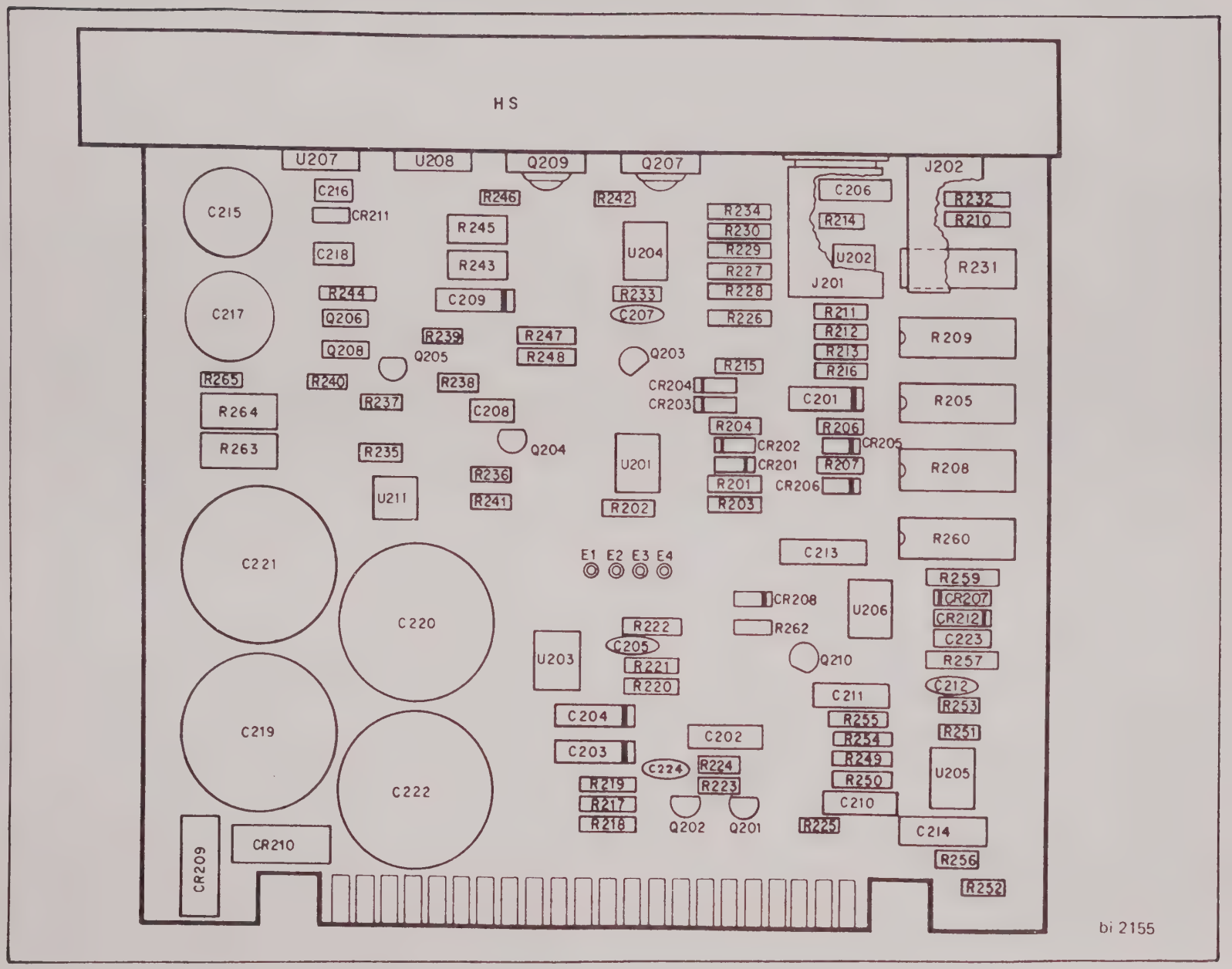


FIGURE 6-8 DRIVE AMPLIFIER BOARD ASSEMBLY

EXPLODED VIEW PARTS LIST
2400S SERIES RECORDER – All Models
INTERCHANNEL EVENT MARKER – 887181
FIGURE 6-9

| ITEM NUMBER | PART NUMBER | DESCRIPTION | SYMBOL NUMBER | USED ON |
|---|---|---|---|---|
| 1 | 887181 | Interchannel Event Marker Assy | | |
| 2 | 286619 | Nut, Plate | | |
| 3 | Not Used | | | |
| 4 | 786658 | Bracket Assy | | |
| 5 | 270153-1 | Contact | | |
| | 9-270158-2 | Connector, Plug | J-105 thru J-107 | |
| 6 | | | | |
| 7 | 269256-7 | Diode | CR-114 thru CR-120 | |
| 8 | 3-227070-2 | Ring, Retaining | | |
| 9 | 385930 | Pivot, Pen | | |
| 10 | 286416 | Spring, Helical | | |
| | 249249-14 | Pin | | |
| 11 | | | | |
| 12 | 260742-1 | Washer, Flat | | |
| 13 | 286415 | Solenoid | L-108 thru L-114 | |
| 14 | 267884-5 | Tube, Pen | | |
| 15 | 241073-0803 | Screw, Set | | |
| | 285166 | Bracket, Pen Pressure | | |

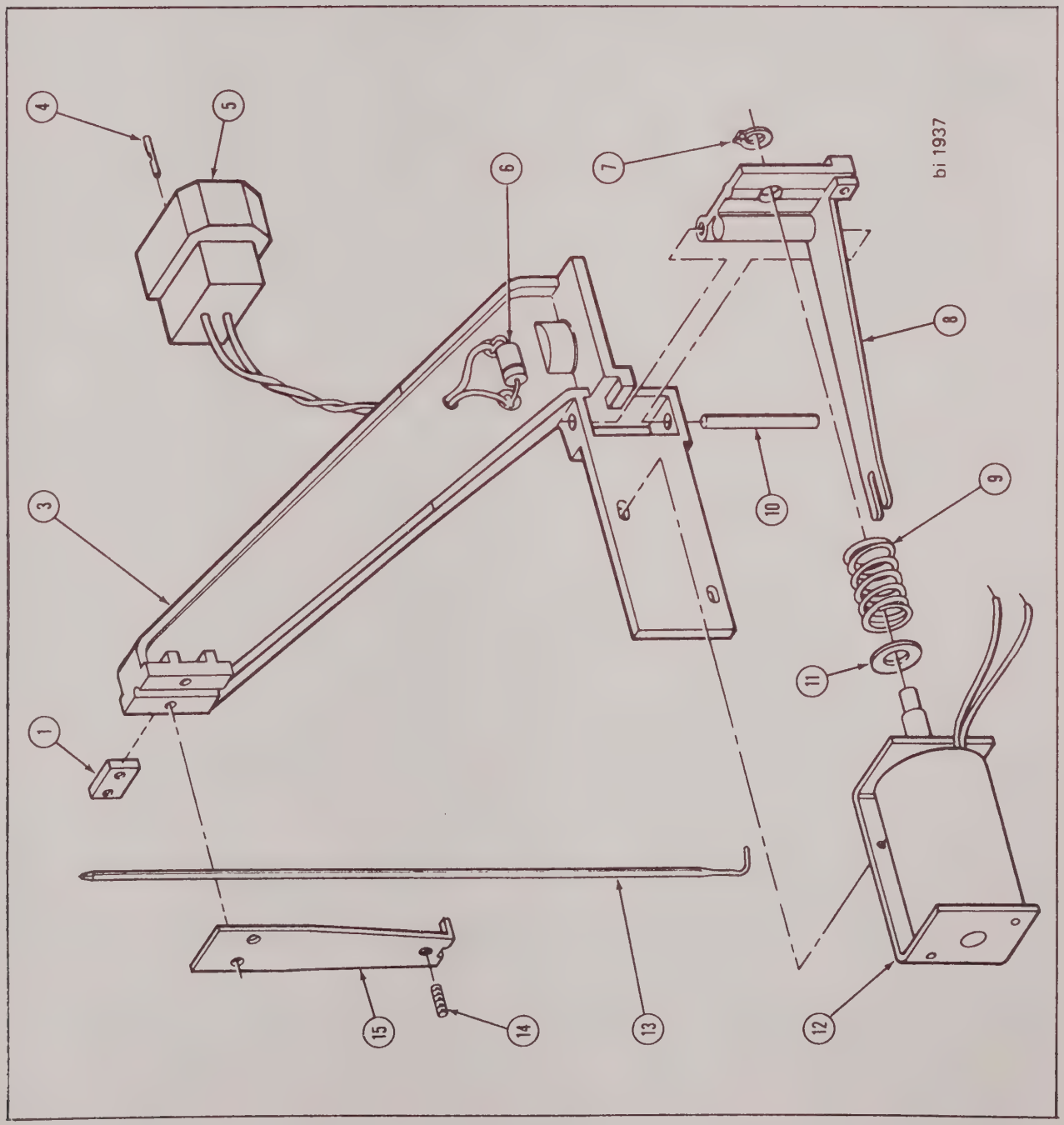


FIGURE 6-9 INTERCHANNEL EVENT MARKER

EXPLODED VIEW PARTS LIST
2400S SERIES RECORDER – All Models
BAR ASSEMBLIES, PENMOTOR – 250mm MAINFRAME
FIGURE 6-10

| ITEM NUMBER | PART NUMBER | DESCRIPTION | SYMBOL NUMBER | USED ON |
|---|---|---|---|---|
| | 785171 | *Bar Assy, Penmotor - 2 Channel | | 250-2 |
| | 785175 | *Bar Assy, Penmotor - 3 Channel | | 250-3 |
| | 785169 | *Bar Assy, Penmotor - 4 Channel | | 250-4 |
| 1 | 884320 | Penmotor Assembly | M-101-104 | |
| 2 | 287184 | Shield | | 250-3&-4 |
| 3 | 2-128693-1 | Grommet | | |
| 4 | 385704 | Bar, Penmotor | | |
| 5 | 684853 | Saddle, Penmotor | | |
| 6 | 384597 | Stop | | |
| | | (A-P) | | |
| | 31-119918-4008 | Screw | | |
| | 1-118195-304 | Washer | | |
| | | ----- * ----- | | |
| 7 | 684896 | Band Clamp, Rear | | |
| | | (A-P) | | |
| | 265424-09010 | Screw | | |
| | | ----- * ----- | | |
| 8 | 285273 | Anchor, Band | | |
| 9 | 684999 | Band, Drive | | |
| 10 | 284993 | Bracket, Pen | | |
| | | (A-P) | | |
| | 31-119914-0004 | Screw | | |
| | 241073-0803 | Set Screw (Pen Adjust | | |
| | | ----- * ----- | | |
| 11 | 784583 | Drive Arm Assembly | | |
| | | (A-P) | | |
| | 31-119922-2608 | Screw | | |
| | 31-119998-26 | Nut, Hex | | |
| | | ----- * ----- | | |
| 12 | 684896 | Band Clamp, Extrusion | | |
| | | (A-P) | | |
| | 265424-09008 | Screw | | |
| | | -----*----- | | |
| 13 | 284924 | Plate, Nut | | |

*Penmotor Bar Assemblies not procurable, use item 1 thru 13 and attaching parts, (A-P).

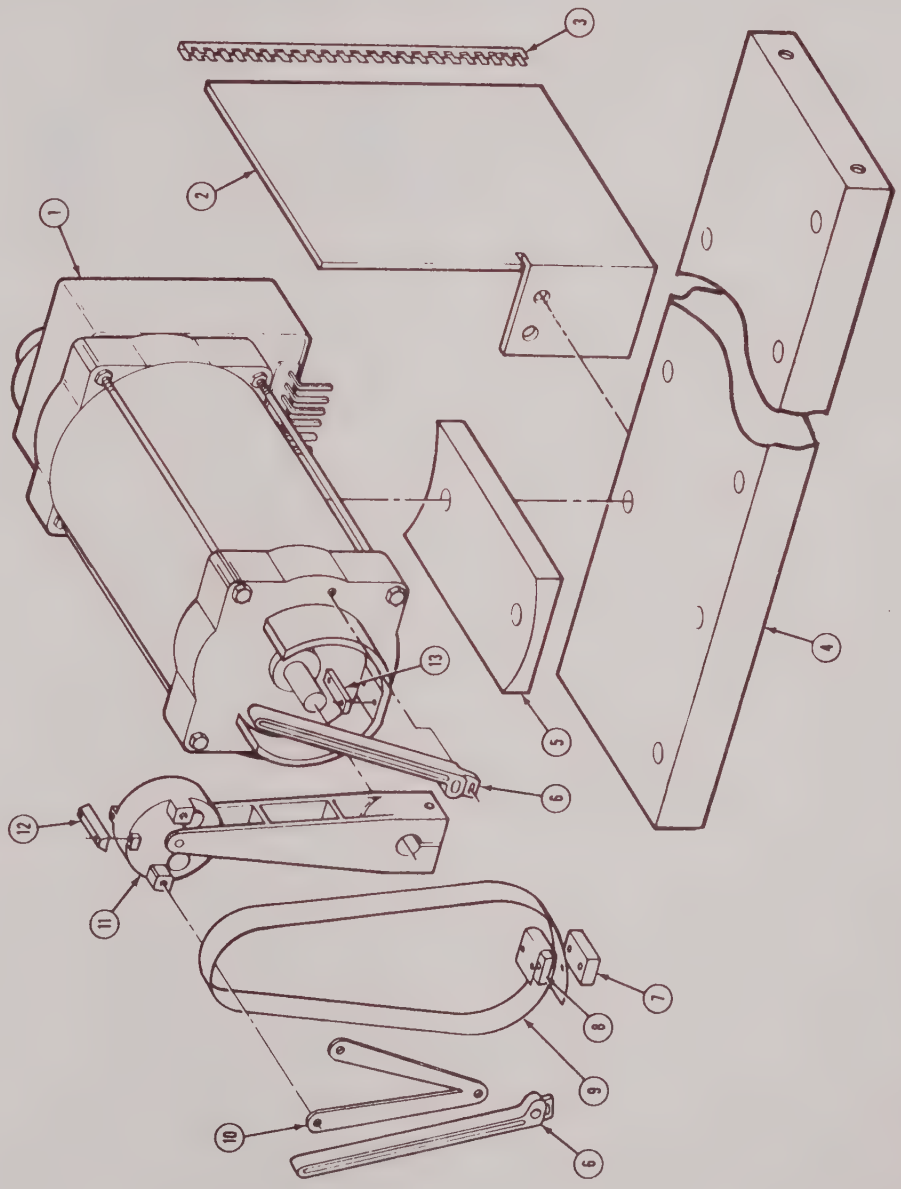


FIGURE 6-10 BAR ASSEMBLY, PENMOTOR

EXPLODED VIEW PARTS LIST
2400S INK WRITING SERIES RECORDER – All Models
BRAKE ASS'Y, 694293
FIGURE 6-11

| ITEM NUMBER | PART NUMBER | DESCRIPTION |
|---|---|---|
| 1 | 685127 | Disk Assy |
| 2 | 0-108400-15 | Insulation, Flex Sleeve |
| 3 | 269291 | Spring |
| 4 | 794054 | Arm Sub Assy |
| 5 | 1-118195-304 | Washer |
| 6 | 0-240731-2 | |

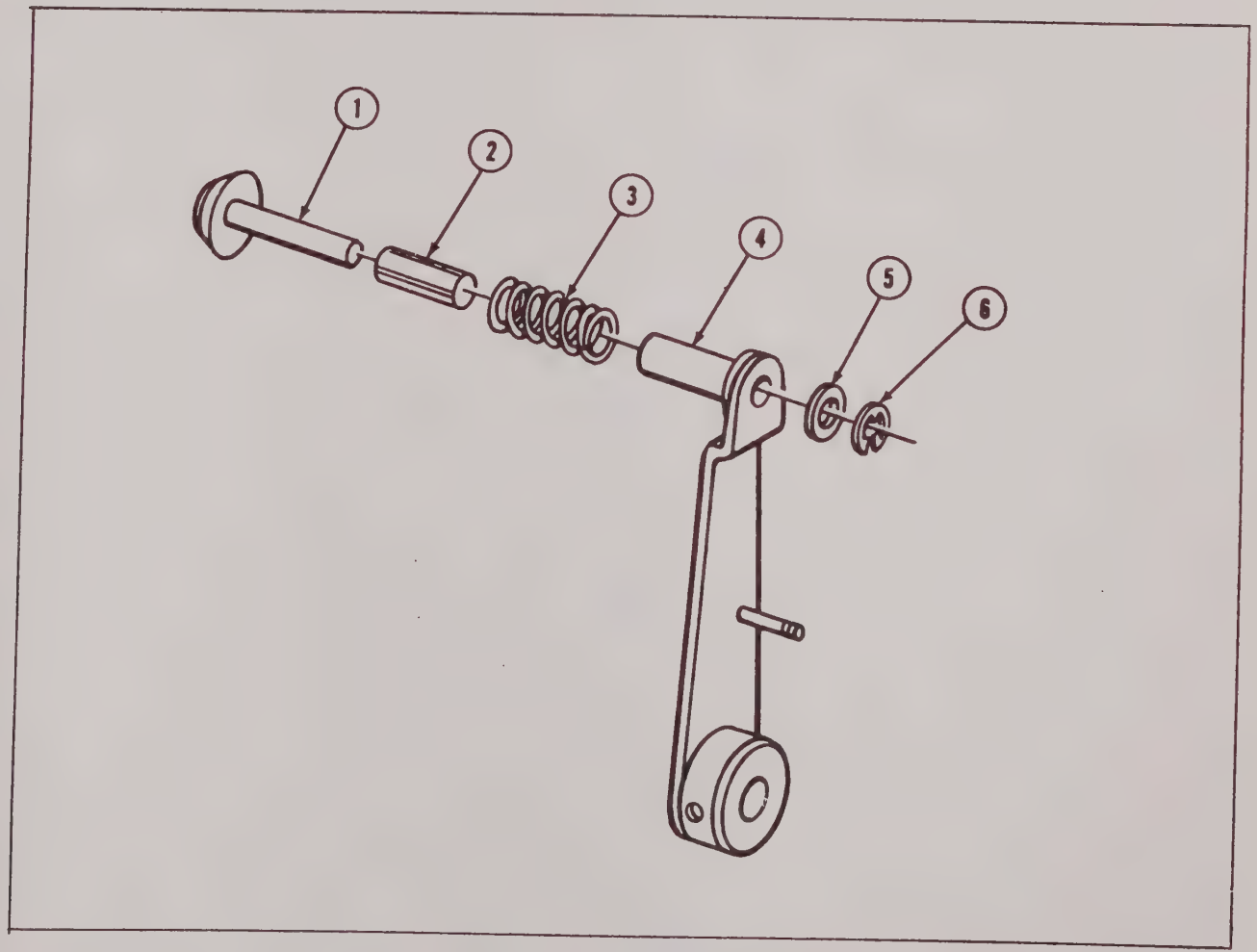


FIGURE 6-11 BRAKE ASSY

2400S INK WRITING RECORDER – All Models
R.H. PLATE ASSEMBLY – 894287
FIGURE 6-12

| ITEM NUMBER | PART NUMBER | DESCRIPTION |
|---|---|---|
| 1 | 385543-1 | Guide |
| | | (A-P) |
| | 31-126906-405 | Screw |
| | | ------*------ |
| 2 | 13-262716-4006 | Screw |
| 3 | 294213 | Bracket, Conn |
| | | (A-P) |
| | 31-119918-6204 | Screw |
| | | ------*------ |
| 4 | 1-240031-12 | Spring |
| 5 | 2-128693-3 | Grommet |
| 6 | 294342 | Bracket, Sensor Adj |
| | | (A-P) |
| | 31-119918-6204 | Screw |
| | | ------*------ |
| 7 | 11-125110-1104 | Rivet |
| | | (A-P) |
| | 1-227070-3 | Ring, Retaining |
| | | ------*------ |
| 8 | 694056 | Indicator Assy |
| | | (A-P) |
| | 11-125110-1104 | Rivet |
| | 1-227070-3 | Ring, Retaining |
| | | ------*------ |
| 9 | 694294 | Cable Assy |
| 10 | 294341 | Bracket, Sensor Mtg |
| | | (A-P) |
| | 31-119918-4003 | Screw |
| | 1-118195-304 | Washer, Plain |
| | | ------*------ |
| 11 | 294343 | Bushing |
| 12 | 267257 | Pulley |
| | | (A-P) |
| | 31-119918-6216 | Screw |
| | 1-216741-420 | Lockwasher, Spring |
| | 1-118195-305 | Washer, Plain |
| | | ------*------ |
| 13 | 285712 | Bracket, R.H. |
| | | (A-P) |
| | 31-119920-6204 | Screw |
| | | ------*------ |
| 14 | 243622 | Pad Friction |
| 15 | 243623 | Spring |
| | | (A-P) |
| | 13-262716-6204 | Screw |
| | | ------*------ |
| 16 | 665789 | Lever Assy |
| | | (A-P) |
| | 1-227070-9 | Ring, Retaining |
| | 127271 | Washer |
| | | ------*------ |

2400S INK WRITING RECORDER – All Models
R.H. PLATE ASSEMBLY – 894287 (Cont'd)
FIGURE 6-12

| ITEM NUMBER | PART NUMBER | DESCRIPTION |
|---|---|---|
| 17 | 285599 | Catch (A-P) |
| | 13-262716-4008 | Screw |
| | | ------*------ |
| 18 | 1-265849-4 | Bracket (A-P) |
| | 31-119920-6204 | Screw |
| | | ------*------ |
| | 894138 | Plate Subassy |
| 19 | 3-129275-105 | Nut, Clinch |
| 20 | 265874-1 | Pin |
| 21 | 4-112468-7 | Pin, Roll |
| 22 | 265874-3 | Pin |
| 23 | 128348 | Washer |
| 24 | 243507-2 | Button, Detent (A-P) |
| | 1-127657-5 | Ring, Retaining |
| | | ------*------ |
| 25 | 240161-310 | Pin |
| 26 | 494090 | Plate, Side, R.H. |
| 27 | 31-119918-4003 | Screw (Not included with side plate assy. order separately) |

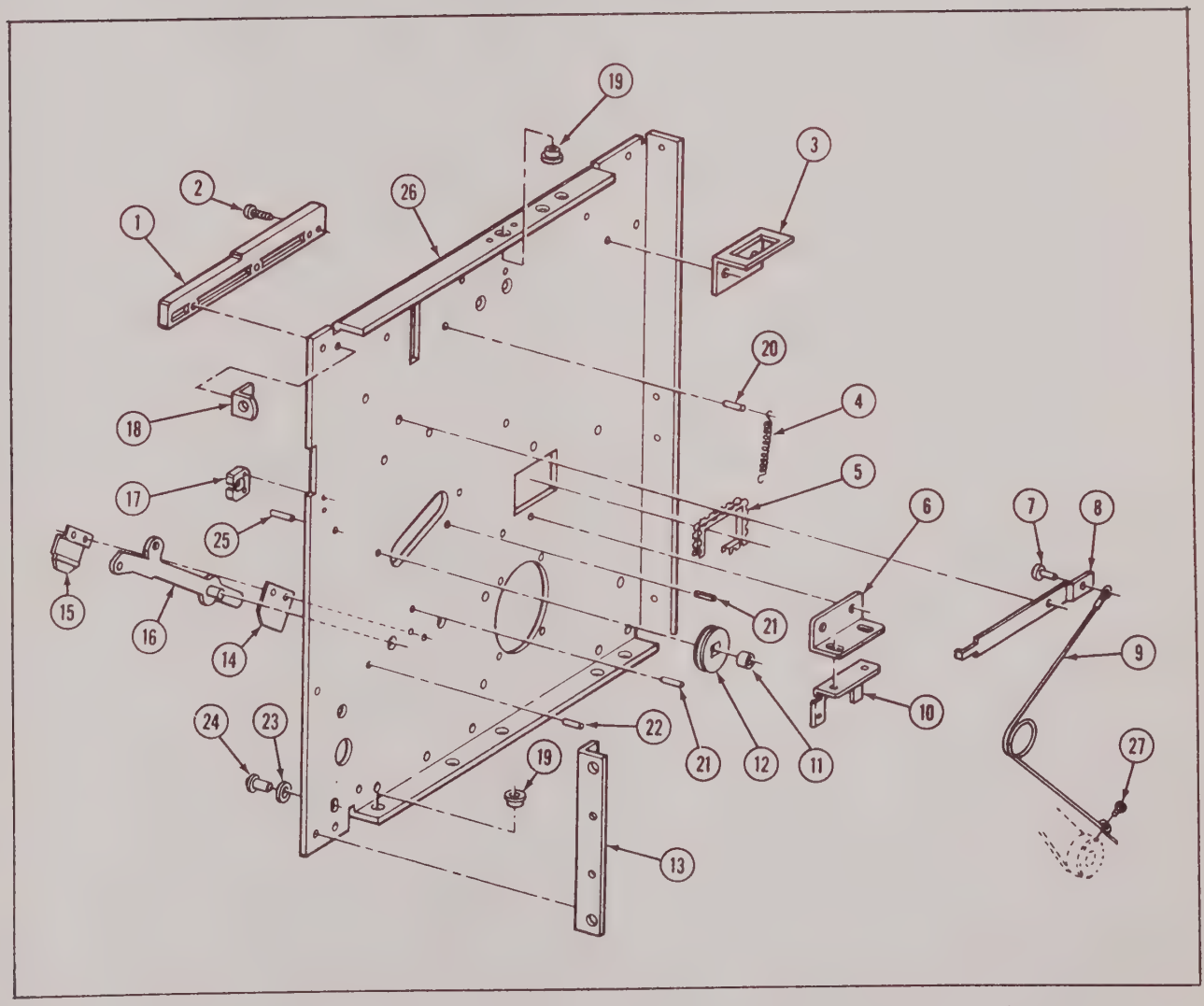


FIGURE 6-12 R.H. PLATE ASSEMBLY

EXPLODED VIEW PARTS LIST
2400S SERIES RECORDER – All Models
SENSOR ASSEMBLY
FIGURE 6-13

| ITEM NUMBER | PART NUMBER | DESCRIPTION | SYMBOL NUMBER |
|---|---|---|---|
| | 783590 | Sensor Assembly | |
| 1 | 286154 | Switch, Sensitive | S-102 |
| 2 | 286386 | Arm Switch | |
| 3 | 743915 | Arm Assy, Sensor | |
| 4 | 286385 | Spring, Torsion | |
| 5 | 286384 | Pin | |

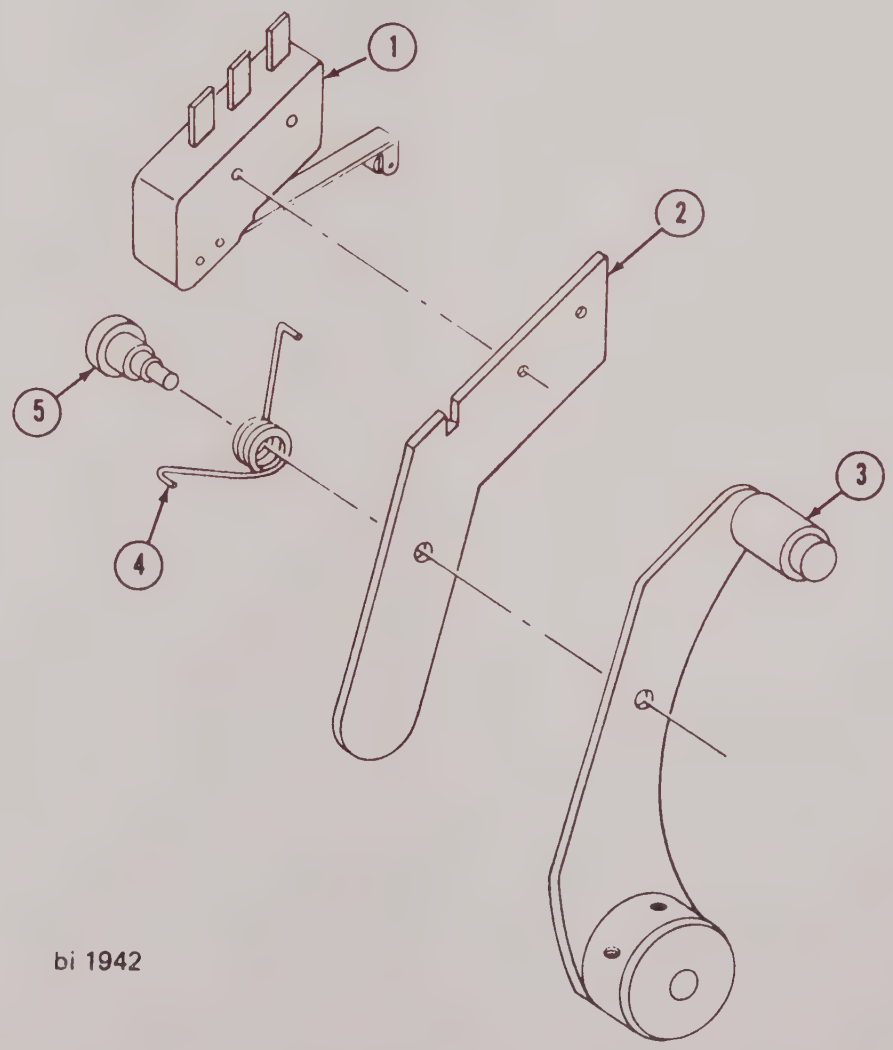


FIGURE 6-13 SENSOR ASSEMBLY

EXPLODED VIEW PARTS LIST
2400S SERIES RECORDER – All Models
TABLE ASSEMBLY, WRITING
FIGURE 6-14

| ITEM NO | PART NUMBER | DESCRIPTION |
|---|---|---|
| | 885748-1 | Table Assembly, Writing |
| 1 | 785703 | Bar Assy, Writing |
| 2 | 785746 | Paper Release Assy |
| 3 | 343616-910 | Support Assy, Right |
| 4 | 4-112468-21 | Roll Pin |
| 5 | 1-210761-6 | Bearing, Ball |
| 6 | 285618 | Roll, Pressure |
| 7 | 685620 | Bar Subassy, Pull |
| 8 | 243867-1 | Packing, Preformed |
| 9 | 343617-910 | Support Assy, Left |

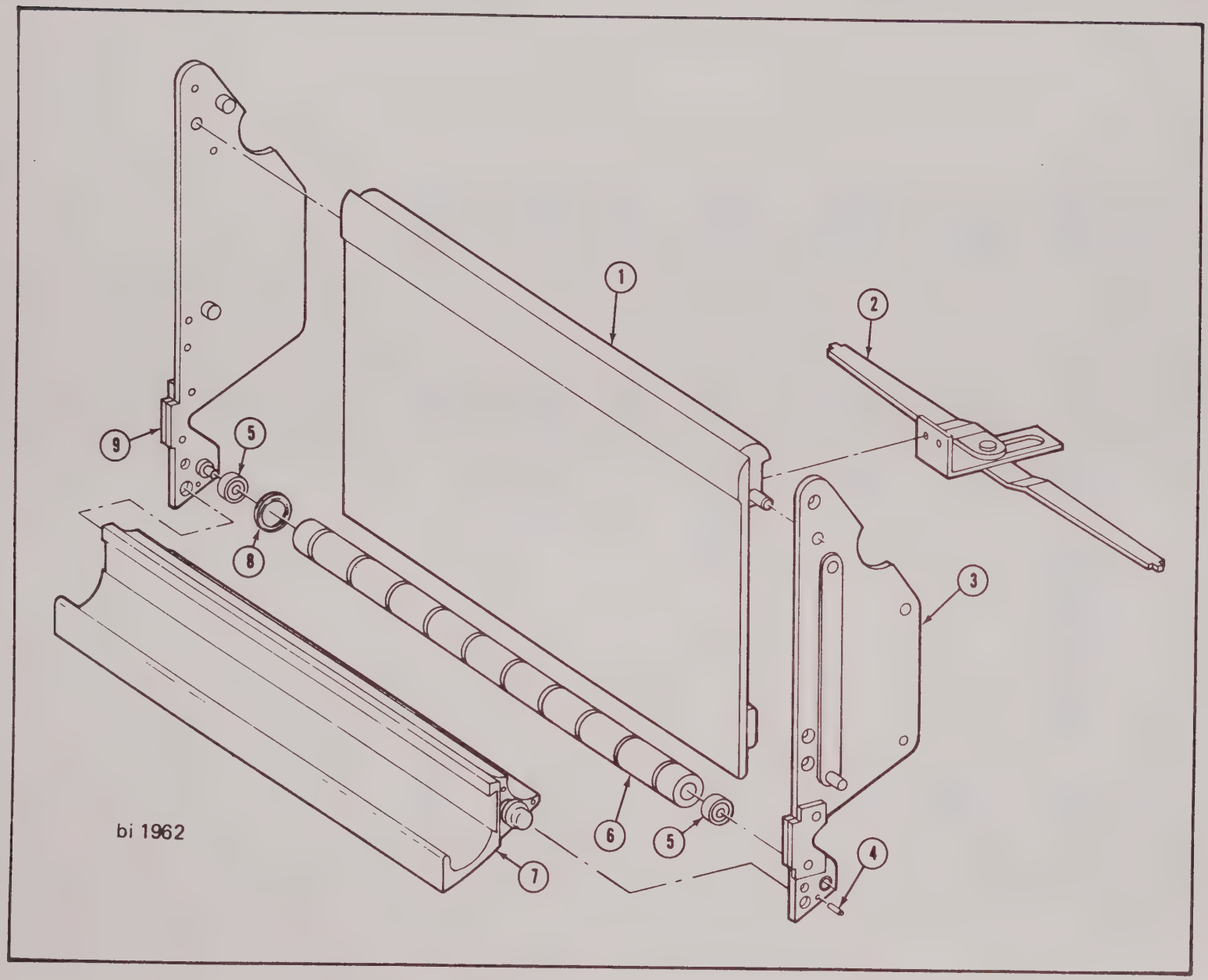


FIGURE 6-14 TABLE ASSEMBLY, WRITING

EXPLODED VIEW PARTS LIST
2400S SERIES RECORDER – All Portable Models
CASE ASSEMBLY 2, 3 & 4 CHANNEL
FIGURE 6-15

| ITEM NO | PART NUMBER | DESCRIPTION | USED ON |
|---|---|---|---|
| | 886569 | Case Assembly (w/o Preamps) | 250-2, 3 & 4 |
| | 886492 | Case Assembly (w/2 Ch Preamp Cage) | 250-2P |
| | 886399 | Case Assembly (w/4 Ch Preamp Cage) | 250-3P & 4P |
| 1 | 486081 | Panel | |
| 2 | 785099-3 | Handle Assy | 250-2, 3 & 4 |
| | 785099-2 | Handle Assy | 250-2P |
| | 785099-1 | Handle Assy | 250-3P & 4P |
| 3 | 686049-3 | Cover, Center | 250-2, 3 & 4 |
| | 686049-2 | Cover, Center | 250-2P |
| | 686049-1 | Cover, Center | 250-3P & 4P |
| 4 | 286048 | Support, Handle | |
| 5 | 486075-2 | Guide, Left | |
| 6 | 486075-1 | Guide, Right | |
| 7 | 686051-3 | Cover, Front & Rear | 250-2, 3 & 4 |
| | 686051-2 | Cover, Front & Rear | 250-2P |
| | 686051-1 | Cover, Front & Rear | 250-3P & 4P |
| 8 | 1-232736-16 | Tape, Teflon | |
| 9 | 4-266107-5 | Bail Assy | 250-2, 3, 4 & 2P |
| | 267451-5 | Bail Assy | 250-3P & 4P |
| 10 | 485177 | Saddle, Recorder | 250-2, 3 & 4 |
| | 886474 | Saddle, Recorder | 250-2P |
| | 886060 | Saddle, Recorder | 250-3P & 4P |
| 11 | 287185 | Bar, Support | |
| 12 | 292817-1 | Spacer | 250-2P |
| | 292817-2 | Spacer | 250-3P & 4P |

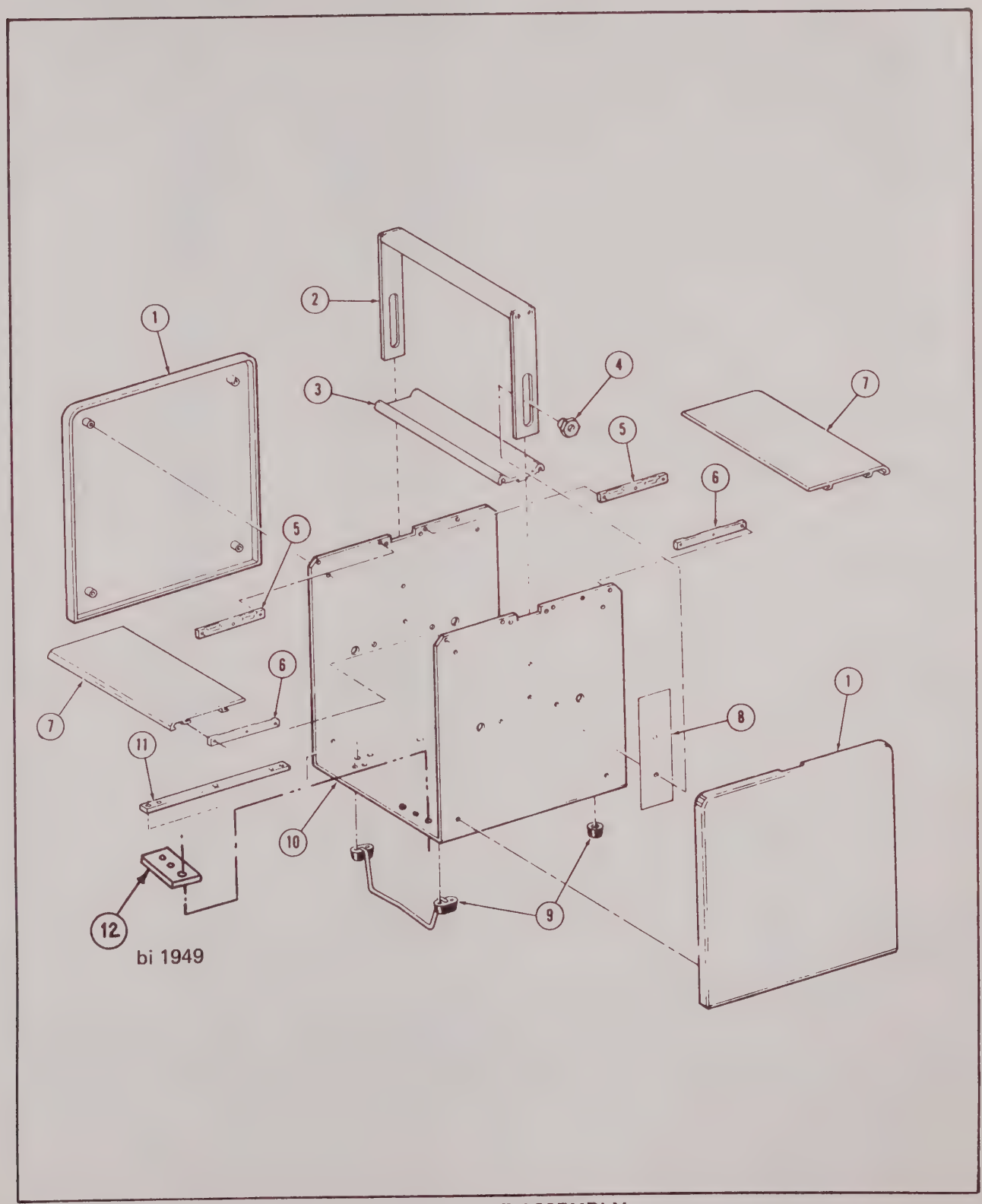


FIGURE 6-15 CASE ASSEMBLY

EXPLODED VIEW PARTS LIST
2400S SERIES RECORDER – ALL MODELS
CAGE ASSEMBLY, PREAMP
FIGURE 6-16

| ITEM NUMBER | PART NUMBER | DESCRIPTION | SYMBOL NUMBER | USED ON |
|---|---|---|---|---|
| | 888321 | Cage Assy, Preamp, 2 Channel | | 250-2P |
| | 895046 | Cage Assy, Preamp, 3 & 4 Channel | | 250-3P & 4P |
| | **886494 | Cage Assy, Preamp | | ** |
| 1 | 786056-1 | Guide, Engraved "1" | | |
| | 786056-2 | Guide, Engraved "2" | | |
| | 786056-3 | Guide, Engraved "3" | | |
| | 786056-4 | Guide, Engraved "4" | | |
| 2 | 386058-2 | Guide, Preamp | | |
| 3 | 386476 | Shelf | | 250-2P |
| | 386059 | Shelf | | 250-3P & 4P |
| 4 | 486461 | Enclosure, Preamp | | 250-2P |
| | 486061 | Enclosure, Preamp | | 250-3P & 4P |
| *5 | 788280 | Cage Assy- Rear | | 250-2P |
| | 786567 | Cage Assy - Rear | | 250-3P & 4P |
| 6 | 286052 | Screw, Shoulder | | |
| 7 | 786475 | Panel Assy, Rear | | 250-2P |
| | 792062 | Panel Assy, Rear | | 250-3P & 4P |
| 8 | 234623-6 | Clamp, Loop | | |
| 9 | 3-240731-10 | Ring, Retaining | | |
| 10 | 885131-2 | Harness Assy | | 250-2P |
| | 885131-1 | Harness Assy | | 250-3P & 4P |
| | 791889 | Harness Assy (A-P) | | |
| | 288490-1 | Terminal Board | | |
| | 1-283408-2 | Contact | | |
| 11 | 286410-16 | Connector | XA-201, 202 203, 204 | |
| 12 | 1-283408-2 | Contact, Electrical (for item 11) | | |
| 13 | 270153-1 | Contact, Electrical (for item 14) | | |
| 14 | 0-270155-1 | Connector | P-203 | 250-3P & 4P |
| | 9-270158-15 | Connector | P-203 | 250-2P |

*Item 5, Cage Assemblies-Rear, not available. Use indented items 6 thru 14 or appropriate Cage Assy. at top of list.
**Used with 3 Channel Recorder and 2 Channel Preamp Cage.

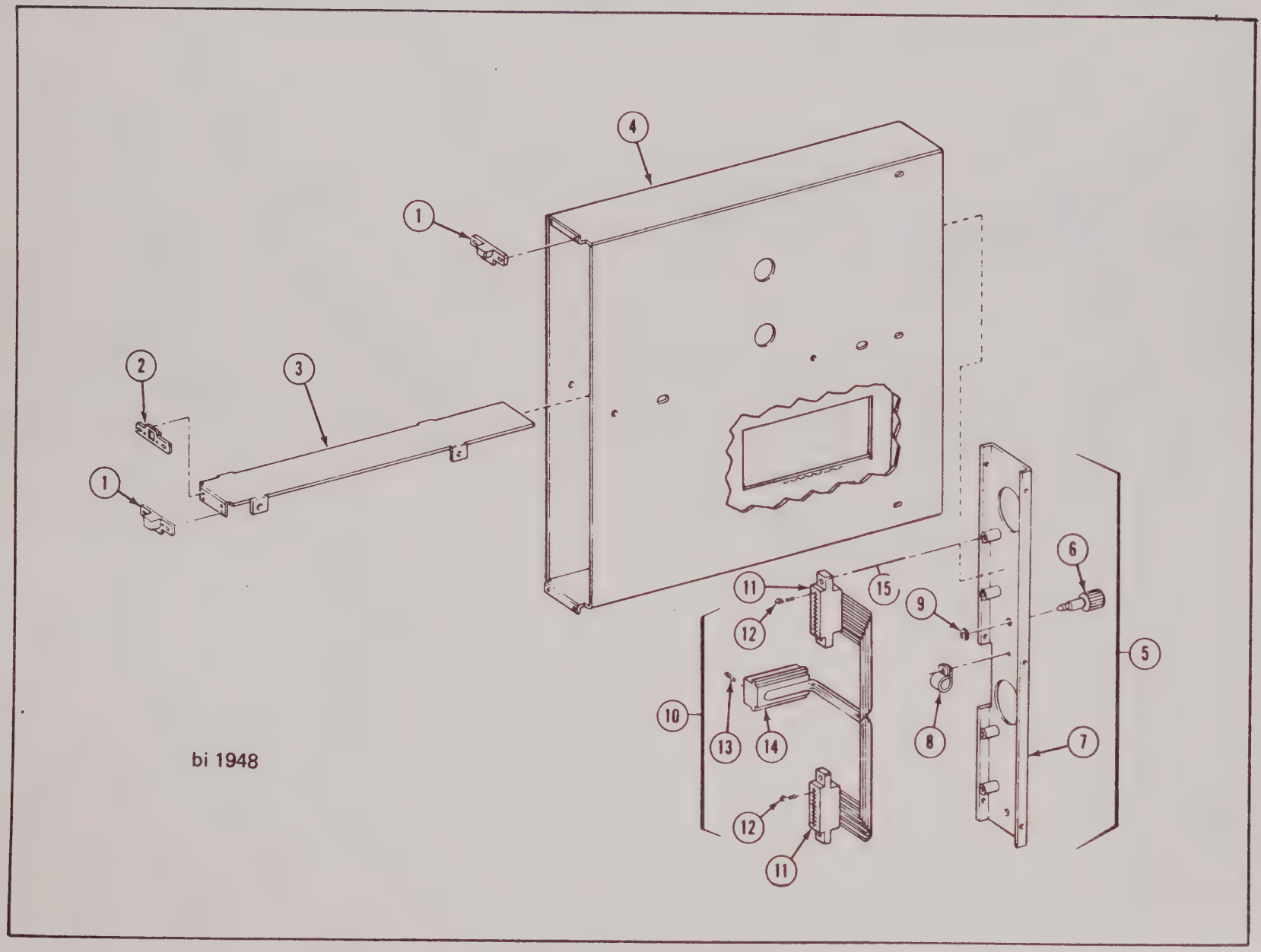


FIGURE 6-16 CAGE ASSEMBLY

EXPLODED VIEW PARTS LIST
2400S SERIES RECORDER — All Models
CHART TAKEUP ASSEMBLY 11-6402-11
FIGURE 6-17

| ITEM NO | PART NUMBER | DESCRIPTION |
|---|---|---|
| 1 | 249617-4 | Plt. Cover - R |
| 2 | 243867-12 | "O" Ring |
| 3 | 246651 | Roller, Guide |
| 4 | 246307 | Block |
| 5 | 236865-3 | Cotter Pin |
| 6 | 266046 | Pulley |
| 7 | 767254-5 | Arm Assembly, L.H. |
| 8 | 9-249640-8206 | Screw Fl. Hd. |
| 9 | 686704 | Shaft Assembly |
| 10 | 247523-106 | Plate, Ident. Mod. No. |
| 11 | 767249-5 | Arm, Right |
| 12 | 249618-4 | Plate Cover - L. |
| 13 | 267253 | Spring Compression |
| 14 | 266184 | Shaft, Shouldered |
| 15 | 667251 | Shaft Assembly Shouldered |
| 16 | 243696 | Retainer, Bearing |
| 17 | 267257 | Pulley |

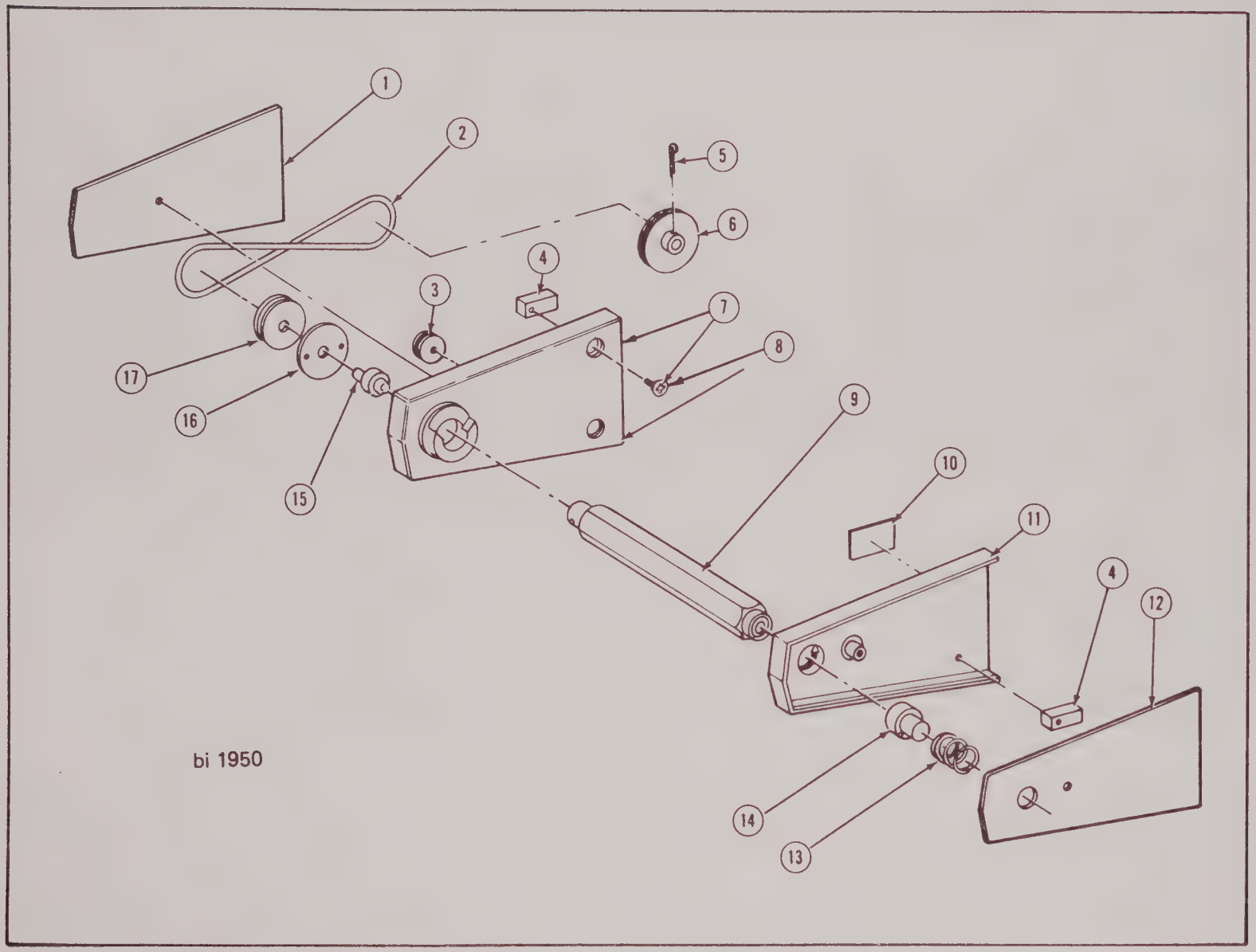


FIGURE 6-17 **CHART TAKEUP ASSEMBLY**

EXPLODED VIEW PARTS LIST
2400S SERIES RECORDER – All Models
DAMPER ASSY
FIGURE 6-18

| ITEM NUMBER | PART NUMBER | DESCRIPTION |
|---|---|---|
| | 694166 | Damper Assy |
| 1 | 694165 | Pulley Assy, Damper |
| 2 | 240889-2 | Bearing, Sleeve |
| 3 | 294163 | Link, Damper - Drive (A-P) |
| | 31-119923-8206 | Screw, Set |
| | | ------*------ |
| 4 | 294140 | Pad, Damper |
| 5 | 127711-6 | Bearing, Sleeve |
| 6 | 294162 | Plate, Cover (A-P) |
| | 31-119920-4006 | Screw, Flat Hd. |
| | | ------*------ |

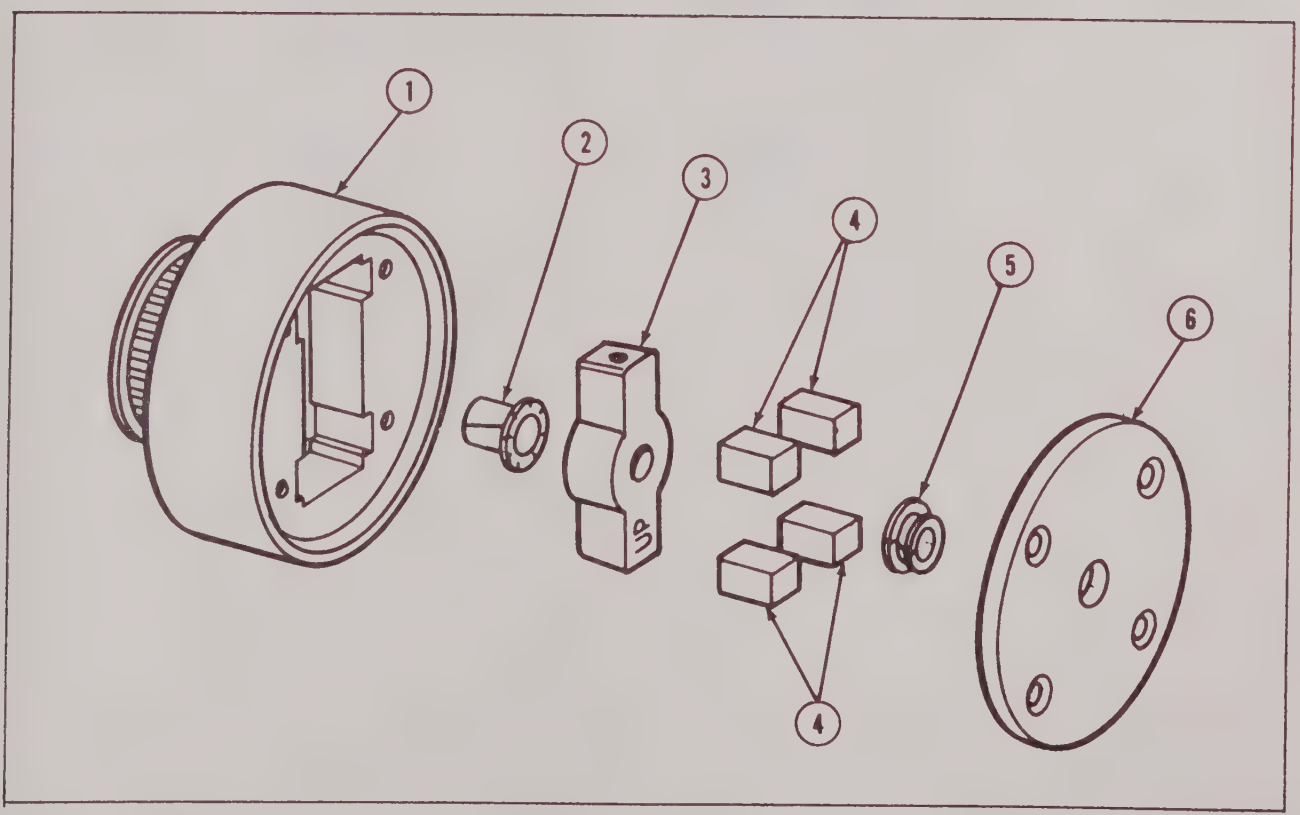


FIGURE 6-18 DAMPER ASSY

EXPLODED VIEW PARTS LIST
2400S SERIES RECORDER – ALL MODELS
BOARD ASSEMBLY PROCESSOR – 893617
FIGURE 6-19

| SYMBOL NUMBER | PART NUMBER | DESCRIPTION |
|---|---|---|
| C405,C410 | 288755-104 | Capacitor .1μfd @ 50V |
| C413, C422 | 288755-104 | Capacitor .1μfd @ 50V |
| C425, C427 | 288755-104 | Capacitor .1μfd @ 50V |
| C430 | 288755-104 | Capacitor .1μfd @ 50V |
| C403, C404 | 280865-156 | Capacitor 15μfd @ 20V |
| C406, C417 | 280865-156 | Capacitor 15μfd @ 20V |
| C420 | 280865-156 | Capacitor 15μfd @ 50V |
| C407 | 20-285066-1 | Capacitor 1μfd @ 50V |
| C408 | 282927-502 | Capacitor .005μfd |
| C409 | 283943-476 | Capacitor 47 μfd @ 20V |
| C416, C426 | 20-290244-107 | Capacitor 100μfd @ 10V |
| C428, C429 | 294069-104 | Capacitor .1μfd @ 10V |
| C414, C415 | 294069-104 | Capacitor .1μfd @ 10V |
| CR401, 405 | 280440 | Diode IN4148 |
| J401 | 294310-4 | Connector |
| J402, J404 | 294310-6 | Connector |
| J403 | 294310-9 | Connector |
| J405 | 294310-3 | Connector |
| J406 | 294063-7 | Connector |
| Q401 | 286143 | Transistor 2N3906 |

EXPLODED VIEW PARTS LIST CONT'D
2400S SERIES RECORDER – ALL MODELS
PROCESSOR 893617
FIGURE 6-19

| SYMBOL NUMBER | PART NUMBER | DESCRIPTION |
|---|---|---|
| R401, 416 | 5-241111-102 | Resistor 1K ohm |
| R402 | 5-241111-103 | Resistor 10K ohm |
| R403 | 1-281851-20001 | Resistor 20K ohm |
| R404, 430 | 5-241111-103 | Resistor 10K ohm |
| R405, 407 | 5-241111-512 | Resistor 5.1K ohm |
| R408 | 5-241111-910 | Resistor 91 ohm |
| R409 | 1-281851-12101 | Resistor |
| R406 | 1-281851-43200 | Resistor 12.1K ohm |
| R410 | 5-241111-470 | Resistor 47 ohm |
| R411, 415 | 1-281851-10002 | Resistor 100K ohm |
| R412, R428 | 1-281851-10001 | Resistor 10K ohm |
| R413, 417 | 5-241111-472 | Resistor 4.7K ohm |
| R414 | 5-241111-274 | Resistor 270K ohm |
| R418 | 5-241111-433 | Resistor 43K ohm |
| R419 | 5-241111-332 | Resistor 3.3K ohm |
| R420 | 5-241111-912 | Resistor 9.1K ohm |
| R425 | 5-241111-102 | Resistor 1K ohm |
| R426 | 1-281851-43200 | Resistor 4.32K ohm |
| R427 | 5-241111-104 | Resistor 100K ohm |
| R429, 431 | 5-241111-102 | Resistor 1K ohm |
| R433, 434 | 5-241111-512 | Resistor 5.1K ohm |
| R437 | 5-241111-102 | Resistor 1K ohm |
| R432 | 269085-502 | Variable P.C. 5K ohm |
| R435 | 5-241111-222 | Resistor 2.2K ohm |
| RN401 | 1-283274-102 | Resistor Network 1K ohm |
| S-401 | 286142-8 | Switch, Dip 206-8 |

EXPLODED VIEW PARTS LIST CONT'D
2400S SERIES RECORDER – ALL MODELS
PROCESSOR 893617
FIGURE 6-19

| SYMBOL NUMBER | PART NUMBER | DESCRIPTION |
|---|---|---|
| U401 | 289243 | Integ. Ckt. MC4024 |
| U401, U408 | 290169-74 | Integ. Ckt. 74LS74 |
| U402 | 290169-04 | Integ. Ckt. 74LS04 |
| U403 | 287613 | Integ. Ckt. NE555 |
| U404 | 293086 | Integ. Ckt. LM331 |
| U405, U406 | 290169-390 | Integ. Ckt. 74LS390 |
| U407 | 290169-390 | Integ. Ckt. 74LS390 |
| U409 | 283948 | Integ. Ckt. LM1458 |
| U410, U417 | 284433-1 | Integ. 74125 |
| U411, U413 | 290169-74 | Integ. 74125 74LS74 |
| U412 | 290169-00 | Integ. Ckt. 74LS00 |
| U414 | 290169-85 | Integ. Ckt. 74LS85 |
| U415, U420 | 290169-155 | Integ. Ckt. 74LS155 |
| U416, U418 | 290169-74 | Integ. Ckt. 74LS74 |
| U419 | 290169-95 | Integ. Ckt. 74LS95 |
| U421 | 290169-393 | Integ. Ckt. 74LS393 |
| U422 | 290169-374 | Integ. Ckt. 74LS74 |
| U423, U425 | 293085 | Integ. Ckt. AD7524 |
| U426 | 293085 | Integ. Ckt. AD7524 |
| U424 | 287740 | Integ. Ckt. LM324 |
| U427 | 293090 | Integ. Ckt. 6502 |
| U428 | 290169-244 | Integ. Ckt. 74LS244 |
| U429 | 291587 | Integ. Ckt. 6810 |
| U430 | 695128-00 | Integ. Ckt. Prog. B2708 |
| Y-401 | 289053-4 | Crystal |

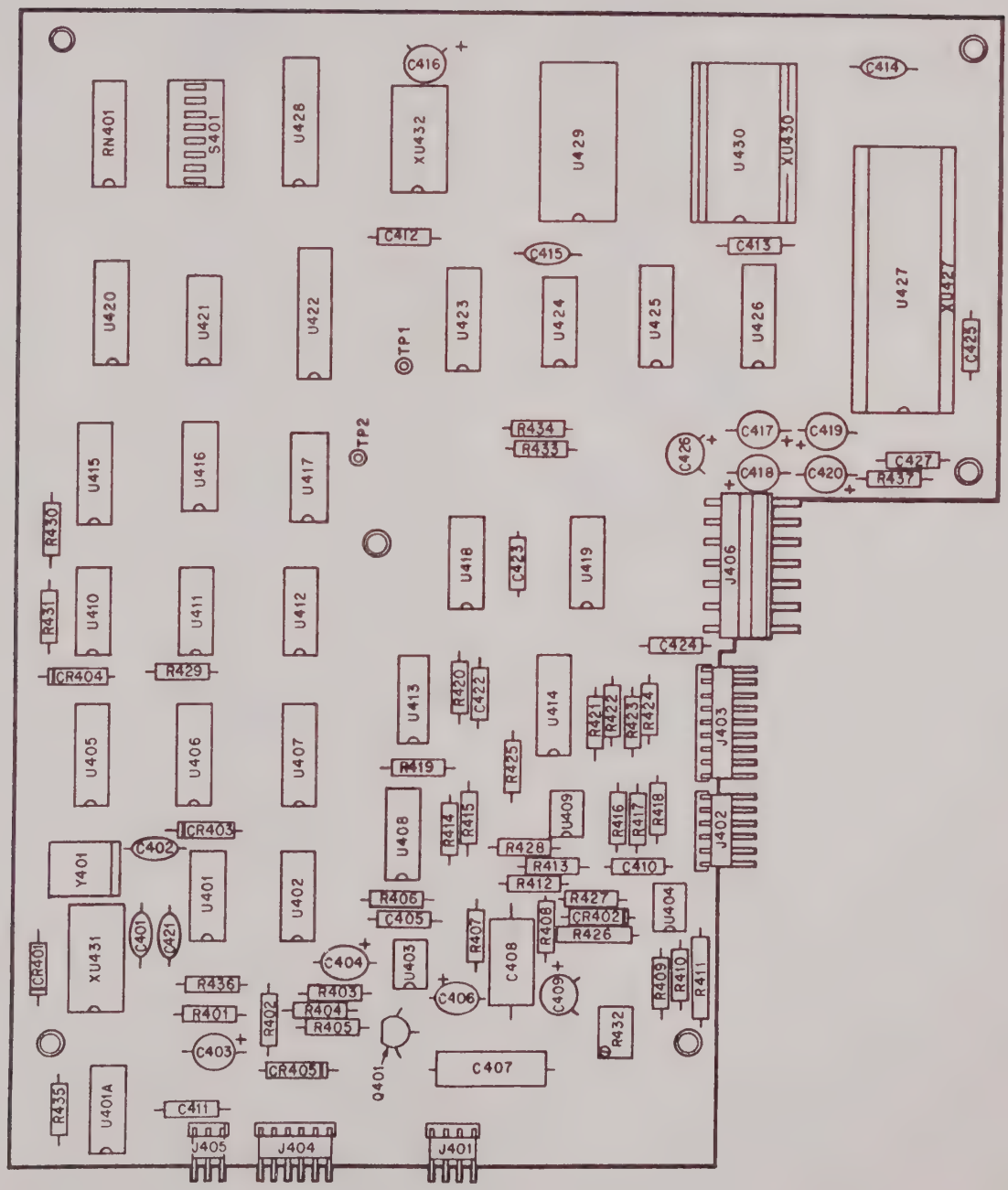


FIGURE 6-19 PROCESSOR BOARD ASSY

EXPLODED VIEW PARTS LIST
2400S SERIES RECORDER – ALL MODELS
BOARD ASSY SWITCHING AMP – 893618
FIGURE 6-20

| SYMBOL NUMBER | PART NUMBER | DESCRIPTION |
|---|---|---|
| C501, 502 | 283943-476 | Capacitor 47μfd @ 20V |
| C503 | 10-125904-602 | Capacitor .006 μfd @ 25V |
| CR501, 502 | 289662 | Diode IN914 |
| CR503, 504 | 289662 | Diode IN914 |
| CR505, 507 | 284425-1 | Diode IN5550 |
| CR506, 508 | 289662 | Diode IN914 |
| CR509, 511 | 284425-1 | Diode IN5550 |
| CR510 | 289662 | Diode IN914 |
| J501 | 294310-6 | Connector |
| J502 | 294063-8 | Connector |
| J503 | 294063-4 | Connector |
| Q501-Q508 | 294066-1 | Transistor 2N611 |
| Q509 | 286143 | Transistor 2N3906 |
| Q510, 511 | 286141 | Transistor 2N3904 |
| R501, 10 | 5-241111-512 | Resistor 5.1K ohm |
| R502, 504 | 5-241111-103 | Resistor 10K ohm |
| R503, 533 | 5-241111-272 | Resistor 2.7K ohm |
| R505, 508 | 5-241111-102 | Resistor 1K ohm |
| R506 | 5-241111-183 | Resistor 18K ohm |
| R507 | 5-241111-274 | Resistor 270K ohm |
| R509, 520 | 5-241111-123 | Resistor 12K ohm |
| R511, 518 | 5-241111-225 | Resistor 2.2M ohm |
| R512, 513 | 5-241111-912 | Resistor 9.1K ohm |
| R514, 519 | 5-241111-202 | Resistor 2K ohm |
| R521, 538 | 5-241111-152 | Resistor 1.5K ohm |
| R515, 526 | 5-241111-512 | Resistor 5.1K ohm |
| R516, 517 | 5-241111-912 | Resistor 9.1K ohm |
| R522, 524 | 5-241111-123 | Resistor 12K ohm |

EXPLODED VIEW PARTS LIST CONT'D
2400S SERIES RECORDER – ALL MODELS
BOARD ASSY SWITCHING AMP – 893618
FIGURE 6-20

| SYMBOL NUMBER | PART NUMBER | DESCRIPTION |
|---|---|---|
| R523, 550 | 5-241111-102 | Resistor 1K ohm |
| R525, R544 | 5-241111-103 | Resistor 10K ohm |
| R527, R529 | 5-115558-331 | Resistor 330 ohm |
| R528, 530 | 5-241111-471 | Resistor 470 ohm |
| R531, 558 | 1-294064-00R5 | Resistor .5 ohm |
| R532, 536 | 5-241111-512 | Resistor 5.1K ohm |
| R534, 561 | 5-241111-182 | Resistor 1.8K ohm |
| R535, 539 | 5-241111-123 | Resistor 12K ohm |
| R537, 560 | 5-241111-272 | Resistor 2.7K ohm |
| R540, 567 | 5-241111-122 | Resistor 1.2K ohm |
| R541, 549 | 5-241111-123 | Resistor 12K ohm |
| R542, 546 | 5-241111-331 | Resistor 330 ohm |
| R543, 547 | 5-241111-471 | Resistor 470 ohm |
| R548, 566 | 5-241111-152 | Resistor 1.5K ohm |
| R545, 53 | 5-241111-512 | Resistor 5.1K ohm |
| R551, 562 | 5-241111-123 | Resistor 12K ohm |
| R552, 569 | 5-241111-103 | Resistor 10K ohm |
| R555, 557 | 5-241111-471 | Resistor 470 ohm |
| R554, R556 | 5-115558-331 | Resistor 330 ohm |
| R559, 563 | 5-241111-512 | Resistor 5.1K ohm |
| R564 | 5-241111-272 | Resistor 2.7K ohm |
| R565, 568 | 5-241111-123 | Resistor 12K ohm |
| R570 | 5-241111-512 | Resistor 5.1K ohm |
| R571, 573 | 5-115558-331 | Resistor 330 ohm |
| R572, 574 | 5-241111-471 | Resistor 470 ohm |

EXPLODED VIEW PARTS LIST CONT'D
2400S SERIES RECORDER – ALL MODELS
BOARD ASSY SWITCHING AMP – 893618
FIGURE 6-20

| SYMBOL NUMBER | PART NUMBER | DESCRIPTION |
|---|---|---|
| U501 | 287740 | Integ. Ckt. LM324 |
| U502 | 286146 | Integ. Ckt. LM339 |
| U503, 505 | 293093 | Transistor MPQ3904 |
| U504 | 293094 | Transistor MPQ3906 |
| U506, 507 | 293093 | Transistor MPQ3904 |
| | 493618 | Board P.C. |
| | 294058 | Plate |

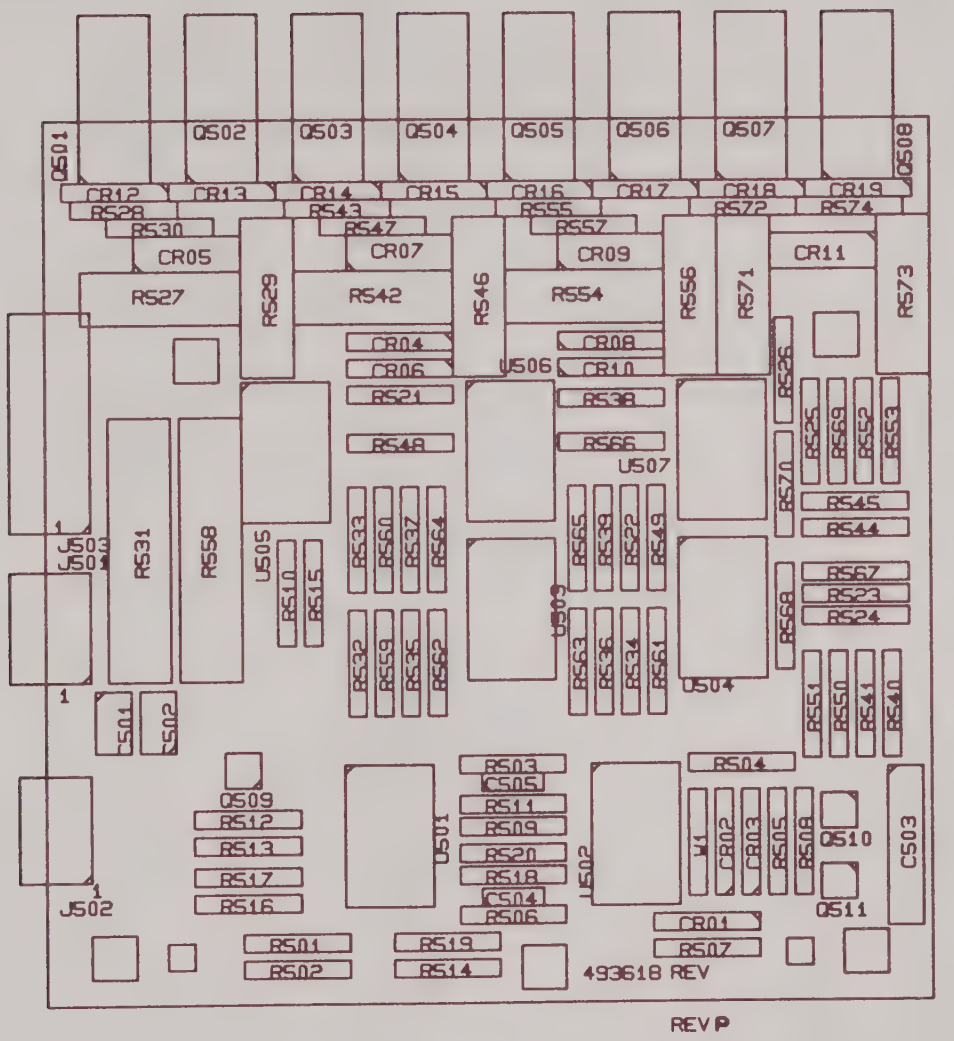


FIGURE 6-20 SWITCHING AMP BOARD ASSY

EXPLODED VIEW PARTS LIST
2400S SERIES RECORDER – ALL MODELS
BOARD ASSY POWER SUPPLY – 893619
FIGURE 6-21

| SYMBOL NUMBER | PART NUMBER | DESCRIPTION |
|---|---|---|
| C301 | 294302-588 | Capacitor 5800 µfd @ 40V |
| C302 | 286010-108 | Capacitor 1000 µfd @ 50V |
| C303 | 294301-908 | Capacitor 9000 µfd @ 25V |
| C304-C306 | 288755-474 | Capacitor .47 µfd @ 50V |
| C307-C309 | 280865-156 | Capacitor 15 µfd @ 20V |
| C310, C311 | 288755-474 | Capacitor .47 µfd @ 50V |
| C312, C313 | 280865-156 | Capacitor 15 µfd @ 20V |
| C314-C316 | 288755-104 | Capacitor .1 µfd @ 50V |
| C317, C318 | 287618-156 | Capacitor, 15 µfd @ 35V |
| C319-C321 | 281344-103 | Capacitor, .01 µfd @ 100V |
| C322, C323 | 294069-104 | Capacitor, .1 µfd @ 10V |
| CR301 | 283651-2 | Diode MDA970-2 |
| CR302, CR303 | 286018-2 | Rectifier KBP04 |
| CR304 | 269256-7 | Diode 1N4007 |
| J301 | 281711-6 | Connector 6 Pins |
| J302 | 281711-8 | Connector 8 Pins |
| J303 | 281711-7 | Connector 7 Pins |
| J304 | 281711-4 | Connector 4 Pins |
| J305 | 281711-3 | Connector 3 Pins |
| K301 | 289048-24 | Relay |
| L301, L302 | 291224-1 | Inductor 8.2 µH |
| L303 | 291224-1 | Inductor 8.2 µH |
| U301 | 285461 | Regulator 7815 |
| U302 | 285778 | Regulator 7915 |
| U303 | 285317 | Regulator 7805 |
| U304 | 289387 | Regulator 78L12 |
| U305 | 289897 | Regulator 79L05 |
| | 493619 | Board, P.C. |

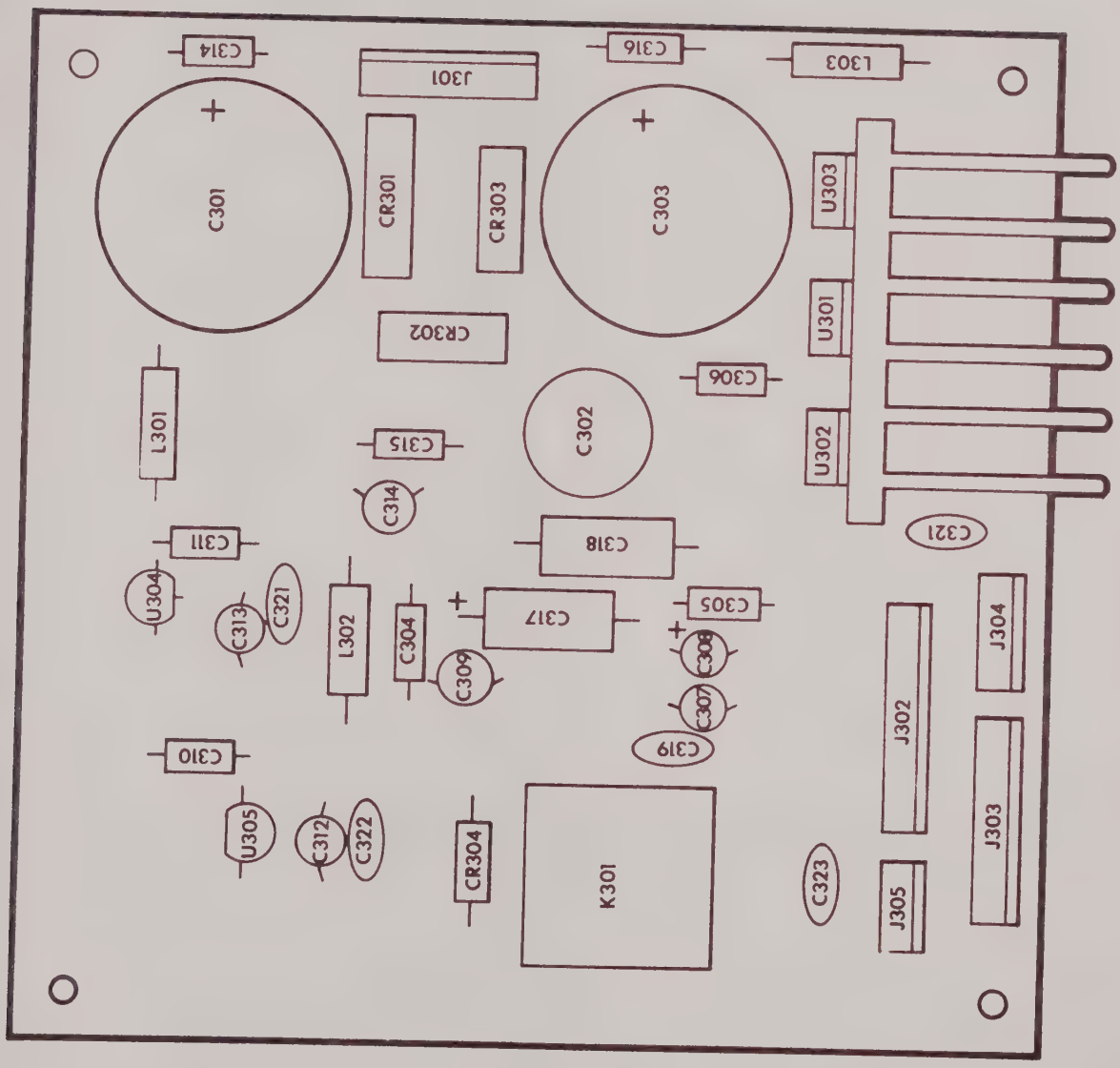


FIGURE 6-21 POWER SUPPLY BOARD ASSY

EXPLODED VIEW PARTS LIST
2400S SERIES RECORDERS
RACK MOUNT KIT ASSY. MODEL 11-1202-30 - RECORDER ONLY
FIGURE 6-22

| ITEM NUMBER | PART NUMBER | DESCRIPTION | SYMBOL NUMBER | USED ON |
|---|---|---|---|---|
| 1 | 210X-4X90-XX | Recorder Assembly (see Note 4) | | |
| 2 | 31-119998-02 | Nut | | |
| 3 | 1-216741-430 | Lockwasher | | |
| 4 | 287011 | Bracket | | |
| 5 | 31-119918-0208 | Screw | | |
| 6 | 31-119998-82 | Nut | | |
| 7 | 1-216741-425 | Lockwasher | | |
| 8 | | | | |
| 9 | 287148 | Nut Plate | | |
| 10 | 31-119918-8206 | Screw | | |
| 11 | 287153 | Spacer | | |
| 12 | 31-119920-0208 | Screw | | |
| 13 | 896065 | Saddle Assembly, Rack | | |
| 14 | 13-262716-4004 | Screw | | |
| 15 | 387145 | Bracket | | |
| 16 | 787144 | Panel Assembly, Front | | |
| 17 | 248352-0218 | Screw | | |
| 18 | 245244-02 | Nut | | |
| 19 | 11-1202-30 | Kit Assembly, Rack Mtg. (see Note 2) | | |
| 20 | 287653 | Spring, Rack Lock | | |
| 21 | 269569-1 | Slides, Pair | | |
| 22 | 269569-2 | Front Bracket | | |
| 23 | 269569-3 | Rear Bracekt | | |
| 24 | 269569-4 | Bar Nut | | |

Notes:
1. Numbers in circles indicate item numbers.
2. Print only.
3. If this kit is not assembled at Gould, this drawing serves as a packing list, shipping list and installation instructions. All items must be shipped, including a print of this drawing.
4. Not included with kit.

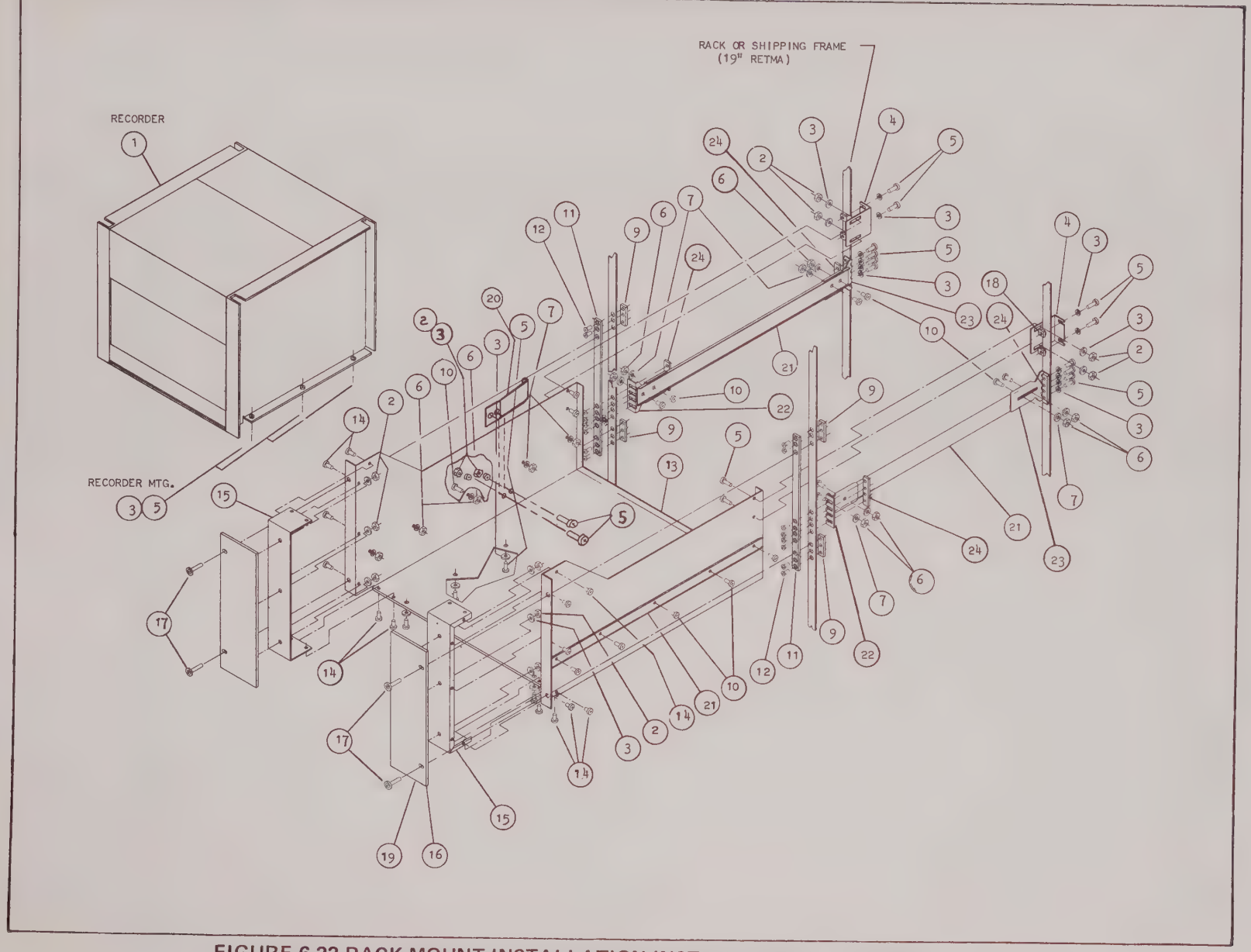


FIGURE 6-22 RACK MOUNT INSTALLATION INSTRUCTIONS - RECORDER ONLY

EXPLODED VIEW PARTS LIST
2400S SERIES RECORDERS
RACK MOUNT KIT ASSY. MODEL 11-1202-31 - Recorder with 2 Channel Preamp Cage
FIGURE 6-23

| ITEM NUMBER | PART NUMBER | DESCRIPTION | SYMBOL NUMBER | USED ON |
|---|---|---|---|---|
| 1 | 2107-4290-XX | Recorder Assembly (see Note 4) | | |
| 2 | 13-262715-4004 | Screw | | |
| 3 | 1-118195-305 | Washer | | |
| 4 | 13-262716-4004 | Screw | | |
| 5 | 10-120053-101 | Lockwasher | | |
| 6 | 293035 | Bracket, Support | | |
| 7 | 894547 | Cage Assembly, 2-Channel | | |
| 8 | 31-119918-8204 | Screw | | |
| 9 | 1-216741-425 | Lockwasher | | |
| 10 | 1-118195-307 | Washer | | |
| 11 | 13-262716-8204 | Screw | | |
| 12 | 10-120053-103 | Lockwasher | | |
| 13 | 1-216741-430 | Lockwasher | | |
| 14 | 31-119998-02 | Nut | | |
| 15 | 31-119998-82 | Nut | | |
| 16 | | | | |
| 17 | 31-119918-8206 | Screw | | |
| 18 | 287148 | Nut Plate | | |
| 19 | 287153 | Spacer | | |
| 20 | 31-119920-0208 | Screw | | |
| 21 | 269548-1 | Spacer | | |
| 22 | 31-119918-0208 | Screw | | |
| 23 | 896066 | Saddle Assembly, Rack | | |
| 24 | 31-119918-6204 | Screw | | |
| 25 | 1-216741-420 | Lockwasher | | |
| 26 | 1-265849-4 | Bracket | | |
| 27 | 787146 | Panel Assembly, Front | | |
| 28 | 248352-0218 | Screw | | |
| 29 | 245244-02 | Nut | | |
| 30 | 287011 | Bracket | | |
| 31 | 11-1202-31 | Kit Assembly, Rack Mtg. (see Note 2) | | |
| 32 | 287653 | Spring, Rack Lock | | |
| 33 | 243898-82 | Nut, Assembled Lock | | |
| 34 | 269569-1 | Slides, Pair | | |
| 35 | 269569-2 | Front Bracket | | |
| 36 | 269569-3 | Rear Bracket | | |
| 37 | 269569-4 | Bar Nut | | |

Notes:
1. Numbers in circles indicate item numbers.
2. Print only.
3. If this kit is not assembled at Gould, this drawing serves as a packing list,shipping list and installation instructions. All items must be shipped including a print of this drawing.
4. Not included with kit.

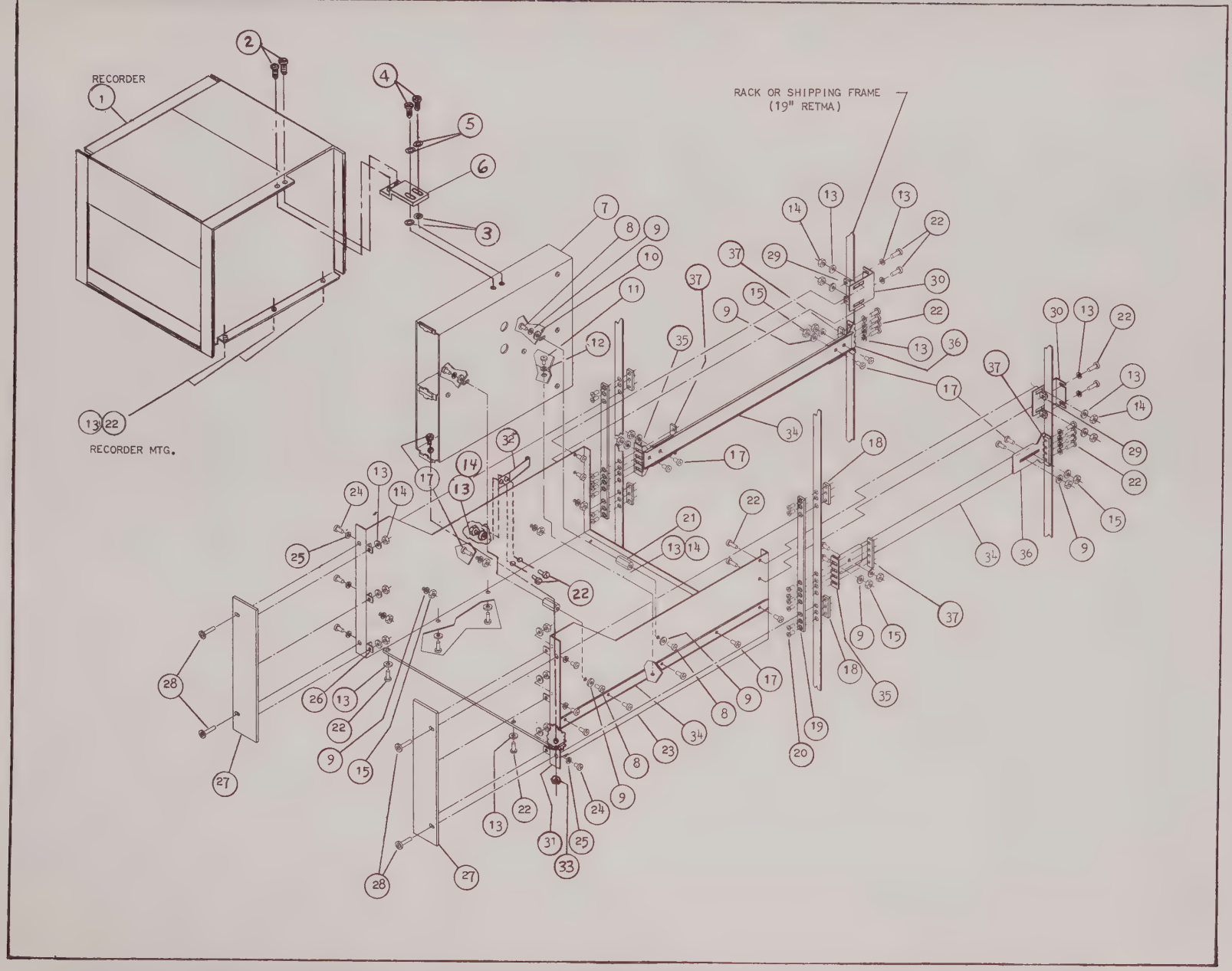


FIGURE 6-23 **RACK MOUNT INSTALLATION INSTRUCTIONS - RECORDER WITH 2-CHANNEL PREAMP CAGE**

EXPLODED VIEW PARTS LIST
2400S SERIES RECORDERS
RACK MOUNT KIT ASSY. MODEL 11-1202-32 - RECORDER with 4 Channel Preamp Cage
FIGURE 6-24

| ITEM NUMBER | PART NUMBER | DESCRIPTION | SYMBOL NUMBER | USED ON |
|---|---|---|---|---|
| 1 | 210X-4X90-XX | Recorder Assembly (see Note 4) | | |
| 2 | 13-262715-4004 | Screw | | |
| 3 | 1-118195-305 | Washer | | |
| 4 | 13-262716-4004 | Screw | | |
| 5 | 10-120053-101 | Lockwasher | | |
| 6 | 293035 | Bracket, Support | | |
| 7 | 895046 | Cage Assembly, 4 Channel | | |
| 8 | 13-262716-8204 | Screw | | |
| 9 | 1-216741-425 | Lockwasher | | |
| 10 | 1-118195-307 | Washer | | |
| 11 | 10-120053-103 | Lockwasher | | |
| 12 | 245244-02 | Nut | | |
| 13 | 31-119998-02 | Nut | | |
| 14 | 1-216741-430 | Lockwasher | | |
| 15 | 287011 | Bracket | | |
| 16 | 31-119918-0208 | Screw | | |
| 17 | 31-119998-82 | Nut | | |
| 18 | 31-119918-8206 | Screw | | |
| 19 | 896064 | Saddle Assembly, Rack | | |
| 20 | 269569-3 | Rear Bracket | | |
| 21 | 269569-4 | Bar Nut | | |
| 22 | 269569-2 | Front Bracket | | |
| 23 | 287148 | Nut Plate | | |
| 24 | 287153 | Spacer | | |
| 25 | 31-119920-0208 | Screw | | |
| 26 | 287137 | Panel, Front | | |
| 27 | 248352-0218 | Screw | | |
| 28 | 11-1202-32 | Kit Assembly, Rack Mtg. (see Note 2) | | |
| 29 | 287653 | Spring, Rack Lock | | |

Notes:
1. Numbers in circles indicate item numbers.

2. Print only.

3. If this kit is not assembled at Gould, this drawing serves as a packing list, shipping list and installation instructions. All items must be shipped, including a print of this drawing.

4. Not included with kit.

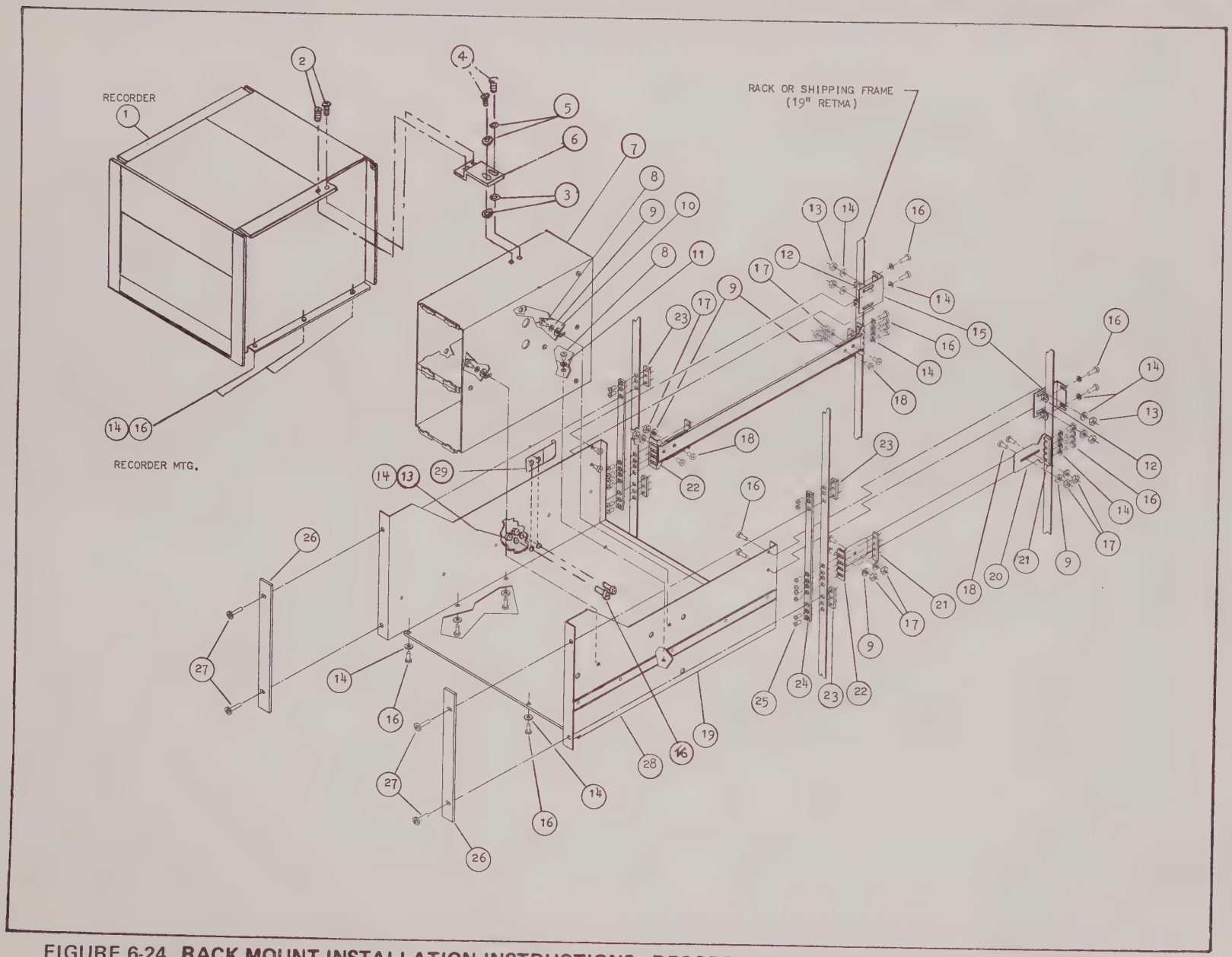


FIGURE 6-24 **RACK MOUNT INSTALLATION INSTRUCTIONS - RECORDER WITH 4-CHANNEL PREAMP CAGE**

## APPENDIX
## SCHEMATIC DIAGRAMS

Below is the list of schematic diagrams which apply to this recorder. The schematics follow this page in the order they are listed and include the assembly name and number which they apply to.

### SCHEMATIC DIAGRAMS

| SCHEMATIC NUMBER | ASSEMBLY NAME | ASSEMBLY NUMBER | REVISION LEVEL |
|---|---|---|---|
| 294232 | Recorder Assembly | 210X-XX90-XX | F-2 |
| 292273 | Drive Amp Board | 886220 | D-1 |
| 293617 | Processor Board | 893617 | S-1 |
| 293618 | Switching Amp Board | 893618 | Q-1 |
| 293619 | Power Supply Board | 893619 | K-1 |
| 293620 | Speed Select Board | 893620 | S-1 |
| 293621 | Variable Speed Board | 893621 | F-1 |
| 294131 | Control Timer Board | 894131 | W-1 |
| 294133 | Sensor Board | 894133 | H-1 |
| 294286 | A.C. Distribution Board | 894286 | J-2 |

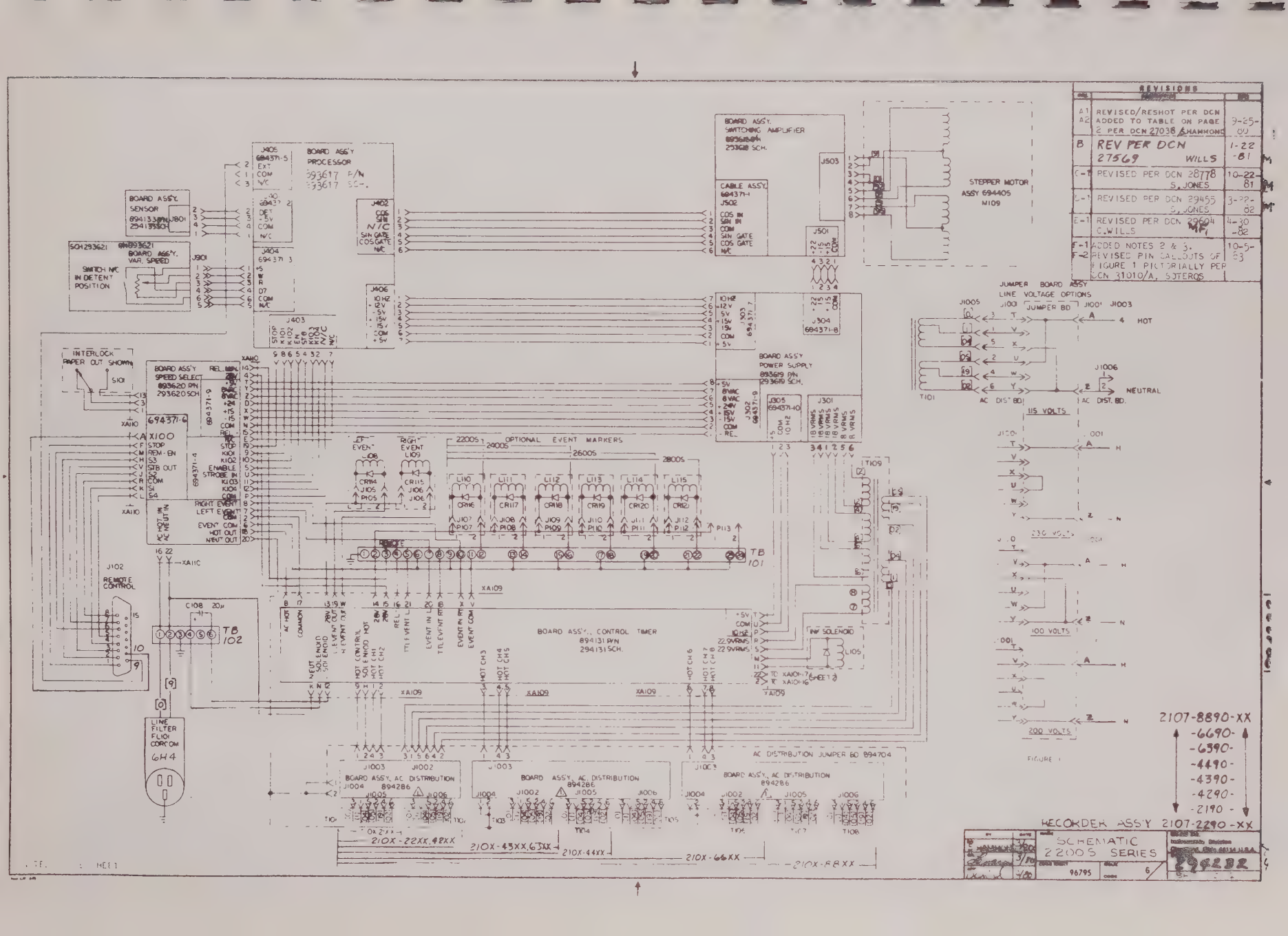
REVISIONS
A1 A2 REVISED/RESHOT PER DCN ADDED TO TABLE ON PAGE 2 PER DCN 27038 9-25-80
B REV PER DCN 27569 WILLS 1-22-81
C-1 REVISED PER DCN 28778 S. JONES 10-22-81
D-1 REVISED PER DCN 29455 S. JONES 3-22-82
E-1 REVISED PER DCN 29604 C. WILLS 4-30-82
F-1 F-2 ADDED NOTES 2 & 3. REVISED PIN CALLOUTS OF FIGURE 1 PICTORIALLY PER DCN 31010/A. STEROS 10-5-83
BOARD ASSY PROCESSOR 893617 P/N 893617 SCH.
BOARD ASSY SENSOR 894133 P/N 294133 SCH.
BOARD ASSY VAR. SPEED SWITCH N/C IN DETENT POSITION
BOARD ASSY SPEED SELECT 893620 P/N 293620 SCH
BOARD ASSY SWITCHING AMPLIFIER 893618 P/N 293618 SCH.
CABLE ASSY 694371-1
STEPPER MOTOR ASSY 694405 M109
BOARD ASSY POWER SUPPLY 893619 P/N 293619 SCH.
JUMPER BOARD ASSY LINE VOLTAGE OPTIONS
HOT
NEUTRAL
AC DIST. BD.
115 VOLTS
230 VOLTS
100 VOLTS
200 VOLTS
FIGURE 1
OPTIONAL EVENT MARKERS
BOARD ASSY, CONTROL TIMER 894131 P/N 294131 SCH.
INF SOLENOID
REMOTE CONTROL
INTERLOCK PAPER OUT SHOWN
LINE FILTER FL101 CORCOM 6H4
AC DISTRIBUTION JUMPER BD 894704
BOARD ASSY, AC DISTRIBUTION 894286
210X-22XX,42XX
210X-43XX,63XX
210X-44XX
210X-66XX
210X-88XX
2107-8890-XX
-6690-
-6390-
-4490-
-4390-
-4290-
-2190-
RECORDER ASSY 2107-2290-XX
SCHEMATIC 2200S SERIES
96795

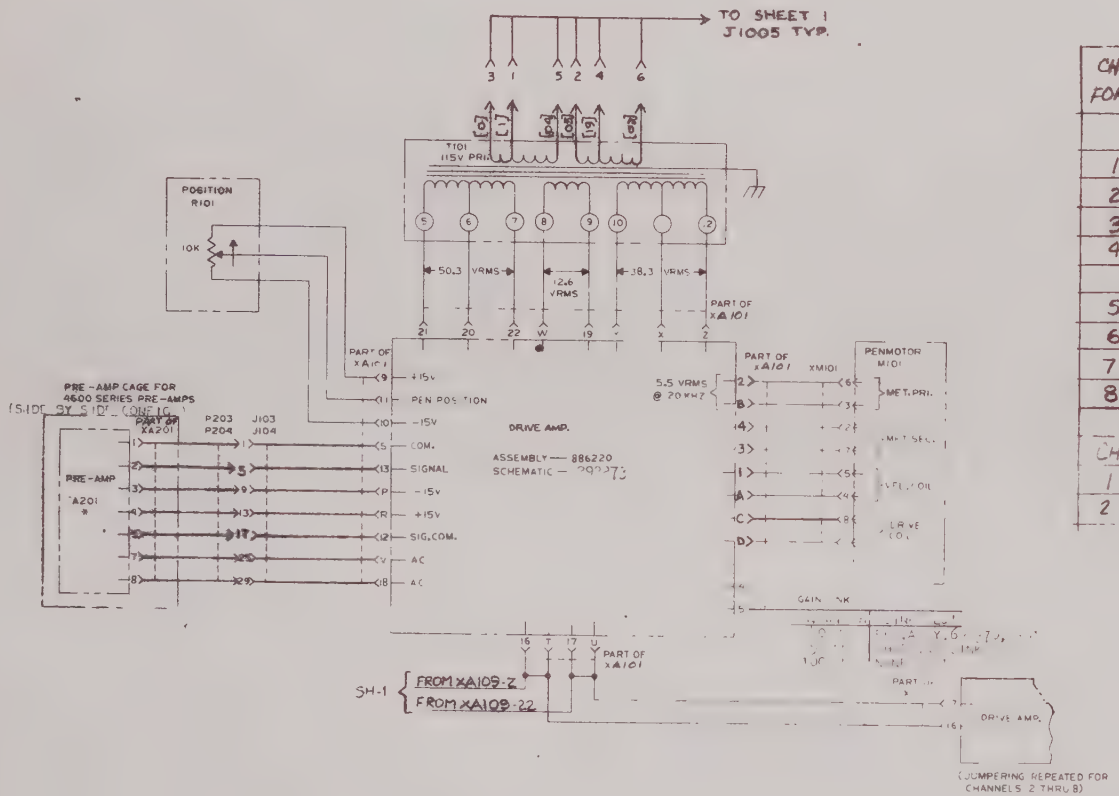


| CH. 1 THRU 8 CONNECTION TABLE FOR 2400S, 2600S, 2800S RECORDERS | | | | | | | |
|---|---|---|---|---|---|---|---|
| P203/J103 TERM USED | | | | | | | |
| 1 | 1 | 5 | 9 | 13 | 17 | 25 | 29 |
| 2 | 2 | 6 | 10 | 14 | 18 | 26 | 30 |
| 3 | 3 | 7 | 11 | 15 | 19 | 27 | 31 |
| 4 | 4 | 8 | 12 | 16 | 20 | 28 | 32 |
| P204/J104 TERM USED | | | | | | | |
| 5 | 1 | 5 | 9 | 13 | 17 | 25 | 29 |
| 6 | 2 | 6 | 10 | 14 | 18 | 26 | 30 |
| 7 | 3 | 7 | 11 | 15 | 19 | 27 | 31 |
| 8 | 4 | 8 | 12 | 16 | 20 | 28 | 32 |
| FOR 2200S RECORDERS | | | | | | | |
| CH. P203/J103 TERM USED | | | | | | | |
| 1 | 1 | 4 | 7 | 10 | 13 | 11 | 14 |
| 2 | 3 | 6 | 9 | 12 | 15 | 2 | 5 |

3. THIS SCHEMATIC IS TO BE USED FOR RECORDERS WITH SERIAL NO. 2000 AND BELOW.

2. [ ] = E.I.A. COLOR CODE.

1. FIGURE 1, TYPICAL WIRING FOR PRIMARIES OF T101 THRU T109.

NOTES:

RECORDER ASS'Y. 2107-2290-XX

| | | | |
|---|---|---|---|
| SHAMNAD | 2200S SERIES | Gould Inc. Instrument Systems Division Cleveland, Ohio 44114 U.S.A. | |
| | 96795 | 294232 | |
| | | 2 OF 2 | |

294232

REPRO. 20,051 REV. V-1

REV. D-1

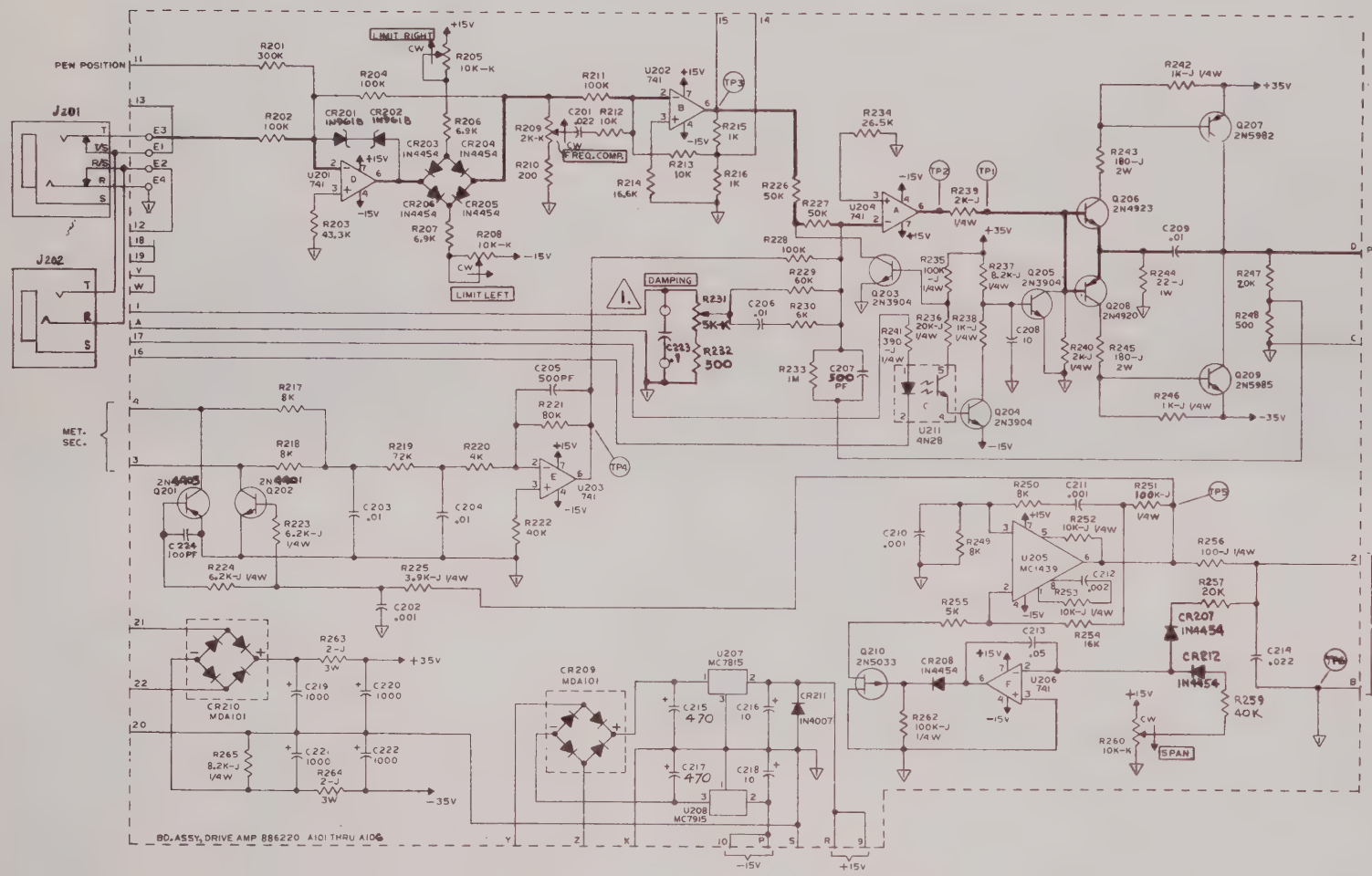


1 C223 USED ONLY IN 80 MM APPLICATIONS.

NOTES:

| | | | |
|---|---|---|---|
| BY / DATE | NAME: SCHEMATIC AMPLIFIER ASSY. DRIVE 886220 | | Gould Inc Instruments Division Cleveland, Ohio 44114 U.S.A. |
| DR. R. CLARK 12/9/77 | | | DWG. NO. 292273 |
| CHECKED 12/9/77 | CODE IDENT 96795 | ISSUE CODE G | |
| APPROVED R. GEIL 12/9/77 | | | |

292273

| | | | | | |
|---|---|---|---|---|---|
| Q-1 | NOT AFFECTED PER DCN 29510 | 8-30-82 S. JONES | N-1 | NOT AFFECTED PER D 28405 / S. JONES |
| R-1 | NOT AFFECTED PER DCN 29990 | 1-4-83 S. JONES | P-1 | NOT EFFECTED PER D 29397/ C. FOWLER |

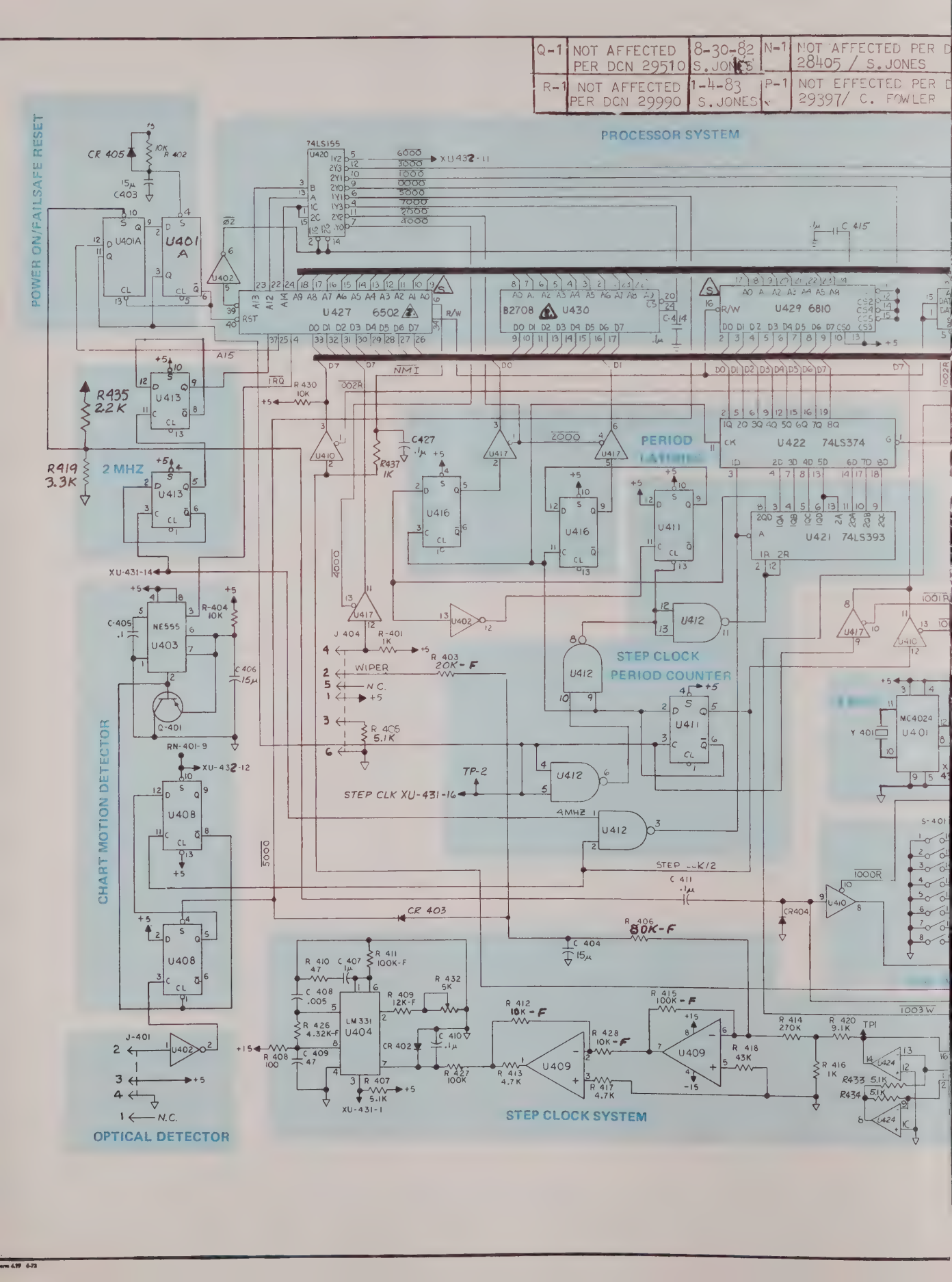

| | | | | | | | | |
|---|---|---|---|---|---|---|---|---|
| CN | 8-18-81 | L-1 | NOT AFFECTED PER DCN 28226 WILLS | 10 JUN 81 | J-1 | REV SCHEMATIC PER DCN 27651 WILLS | 9 SEP 81 | |
| CN | 3-16-82 | M-1 | REV'D PER DCN 28385/ S. JONES | 7-27 81 | K-1 | NOT AFFECTED PER DCN 28135 WILLS | 14 MAY 81 | |

## REVISIONS

| SYM. | DESCRIPTION | DATE |
|---|---|---|
| A1 | NOT AFFECTED PER DCN 26307/C. WILLS | 4-1-80 |
| B-1 | CALL OUTS OMITTED PER DCN 26453 WILLS | 2-MAY 80 |
| B-2 | NOT AFFECTED PER DCN 26740/HAMMOND | 7-2-80 |
| C-1 | NOT AFFECTED PER DCN 26893/ S. HAMMOND | 9-24-80 |
| D-1 | CHANGED CONNECTOR PIN DESIGNATIONS PER DCN/ | |
| D-2 | REVISED SCHEMATIC PER DCN 26896/ S. HAMMOND | 9-24-80 |
| E-1 | NOT AFFECTED PER DCN 27211/ S. HAMMOND | 10-29-80 |
| F-1 | REVISED SCHEMATIC PER DCN 27228/ S. HAMMOND | 11-6-80 |
| F-2 | NOT AFFECTED PER DCN 27229 / S. HAMMOND | 11-6-80 |
| G-1 | NOT AFFECTED PER DCN 27314 WILLS | 18-NOV-80 |
| H1 | REVISED SCHEMATIC PER DCN 27611 WILLS | 1-26-81 |

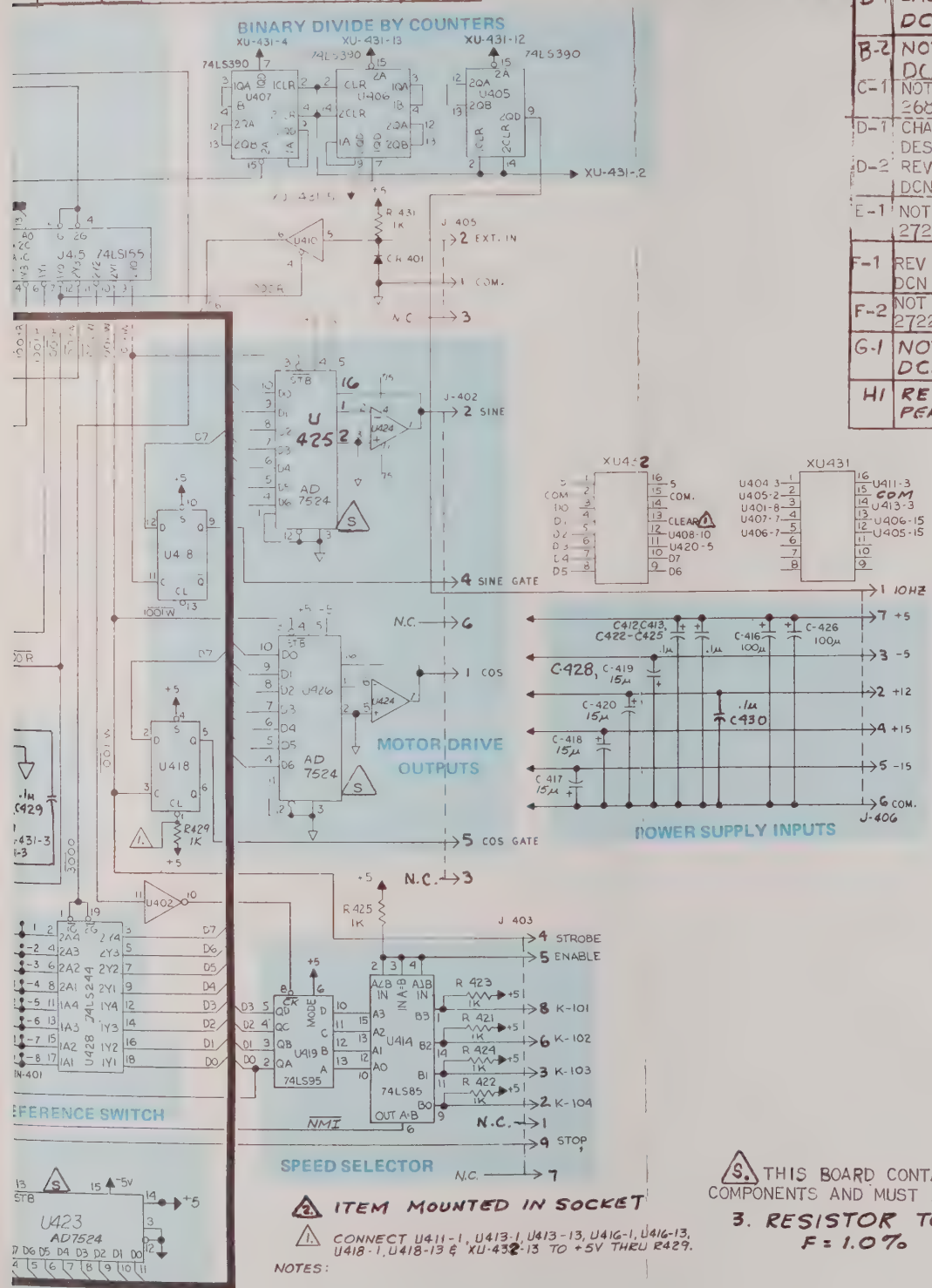


⚠5. THIS BOARD CONTAINS STATIC SENSITIVE COMPONENTS AND MUST BE HANDLED PER ME1-0011.

3. RESISTOR TOLERANCE F = 1.0%

⚠2. ITEM MOUNTED IN SOCKET

⚠1. CONNECT U411-1, U413-1, U413-13, U416-1, U416-13, U418-1, U418-13 & XU-432-13 TO +5V THRU R429.

NOTES:

# BD. ASS'Y., PROCESSOR 893617

| BY | DATE | NAME | Gould Inc. Instruments Division Cleveland, Ohio 44114 U.S.A. |
|---|---|---|---|
| DR WILLS | 3/80 | SCHEMATIC- | |
| CH Lawrence | 3/80 | | |
| APP Daniel | 3/80 | CODE IDENT. 96795 / ISSUE CODE G | DWG. NO. 293617 |

CONTINUED
RIGHT MOST EDGE
THIS DRAWING

| | | | | | | SYM | DESCRIPTION |
|---|---|---|---|---|---|---|---|
| M-1 | NOT AFFECTED PER DCN PER DCN 29485 / S. JONES | 4-29-82 | K-1 | NOT AFFECTED PER DCN 28779/ S. JONES | 11-6-81 | H-1 | NOT AFFECTED PE ISSUE OF DCN 27 K. HAMIL |
| N-1 | REVISED PER DCN 29710 SOTEROS | 6-8-82 | L-1 | REV'D NOTE 2 PER DCN 28873 / S. JONES | 11-6-81 | J-1 | NOT AFFECTED PER 28405 / S. JONES |
| P-1 | NOT AFFECTED PER DCN 29711/A. SOTEROS | 6-8-82 | | | | | |

W1

R501 5.1K
R502 10K
R503 2.7K
R504 10K
R505 1K
R506 18K
R507 270K
R508 1K
R509 12K
R510 5.1K
R511 2.2M
R512 9.1K
R513 9.1K
R514 2K
R515 5.1K
R516 9.1K
R517 9.1K
R518 2.2M
R519 2K
R520 12K

C503 .006U
C504 100PF
C505 100 Pf

Q509 2N3906
Q510 2N 3904
Q511 2N3904

CR01 IN914
CR02 IN914
CR03 IN914

U501 LM324
U502 LM339

+15
-15

SAWTOOTH GENERATOR

ERROR AMPLIFIER

PULSE WIDTH MODULATOR

POWER

J502-2
SIN IN

J502-3
COM

J502-1
COS IN

J502
SIN GATE

J502-
COS GATE

J50
N/C

J501-2
J501-1
J501-3
J501-4

C501 20μ
C502 20μ

COM
+22

2. TRANS. Q501 THRU 508 (2N6107) ARE HEATSINKED TO CHASSIS
1. ALL RESISTORS ARE 1/4W 5%.
NOTES: UNLESS OTHERWISE SPECIFIED

| SYM | DESCRIPTION | DATE |
|---|---|---|
| E-1 | NOT AFFECTED PER DCN 27555/C. WILLS | 1-30-81 |
| F-1 | NOT AFFECTED PER DCN 27943 /S. JONES | 1-6-81 |
| G-1 | NOT AFFECTED PER DCN [illegible] WILLS | -6-81 |

| SYM | DESCRIPTION | DATE |
|---|---|---|
| C-1 | NOT AFFECTED PER DCN 26921 S. HAMMOND | 9-4-80 |
| D-1 | REVISED PER SCN 27366 J. DAVIS | 12-4-80 |

**REVISIONS**

| SYM. | DESCRIPTION | DATE |
|---|---|---|
| A1 | NOT AFFECTED PER DCN 26306/C. WILLS | 4-1-80 |
| B-1 | CR501 THRU CR511 WERE D501 THRU D511 // PER DCN 26498/ M. LOMBARDO | 5-9-80 |
| C-1 | REVERSED PIN DESIGNATIONS PER DCN 26920 S. HAMMOND | 9-4-80 |
| C-2 | C503 WAS .01u | |
| C-3 | CR505, 07, 09, 11 WERE UTR40 | |

| | | |
|---|---|---|
| Q-1 | NOT AFFECTED PER DCN 29978 S. JONES | 9-28-82 |

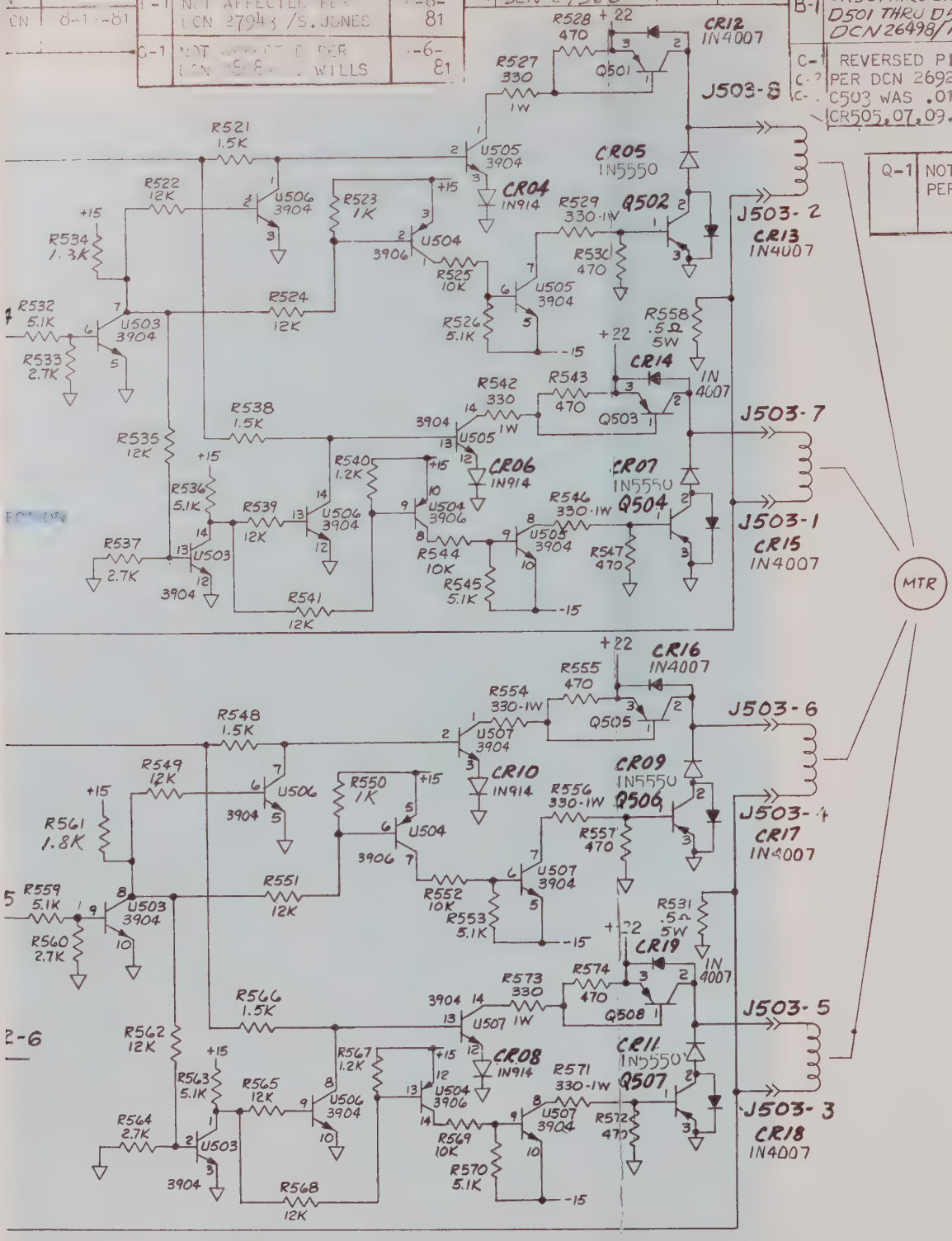


BD. ASS'Y., SWITCHING 893618

| BY | DATE | NAME SCHEMATIC | Gould Inc. Instruments Division Cleveland, Ohio 44114 U.S.A. |
|---|---|---|---|
| DR WILLS | 10/79 | | |
| CH Francis | 3/80 | | |
| APP Daniel | 3/80 | | |
| | | CODE IDENT. 96795 / ISSUE CODE G | DWG NO 293618 |

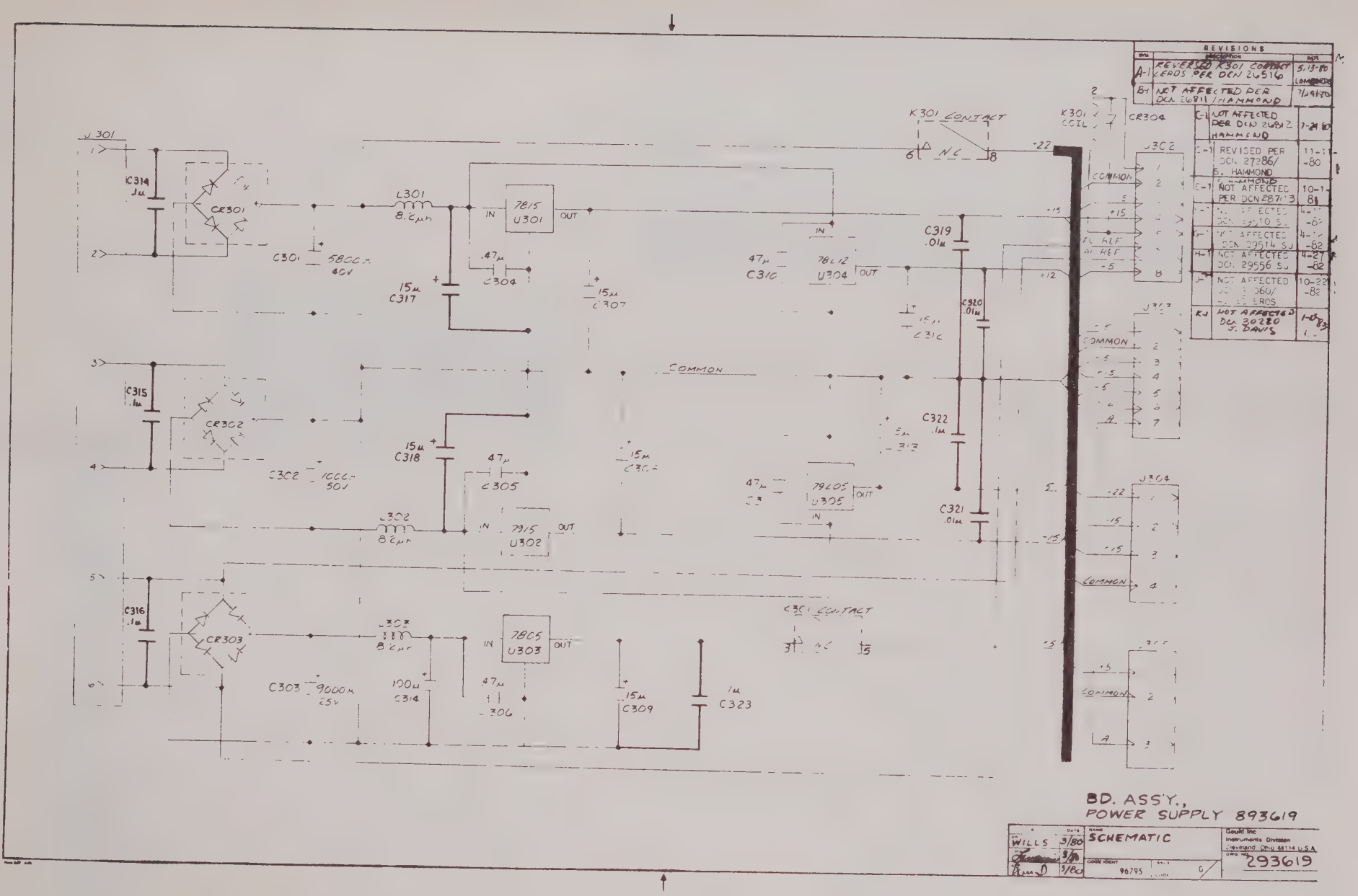
REVISIONS
A-1 REVERSED K301 CONTACT LEADS PER DCN 26516 5-13-80
B-1 NOT AFFECTED PER DCN 26811 / HAMMOND 7/24/80
C-1 NOT AFFECTED PER DCN 26812 HAMMOND 7-24-80
C-1 REVISED PER DCN 27286/ S. HAMMOND 11-1 -80
E-1 NOT AFFECTED PER DCN 28713 10-1 81
NOT AFFECTED DCN 29514 SJ 4-27 -82
NOT AFFECTED DCN 29556 SJ 4-27 -82
NOT AFFECTED DCN 30280 J. DAVIS 1-0 83
J301
C314 .1µ
CR301
C301 5800µ 40V
L301 8.2µh
7815 U301
IN
OUT
.47µ C304
15µ C317
15µ C307
47µ C310
7812 U304
C319 .01µ
C320 .01µ
C322 .1µ
C321 .01µ
K301 CONTACT
NC
K301 COIL
CR304
J302
COMMON
+22
+15
+12
+5
C315 .1µ
CR302
C302 1000µ 50V
15µ C318
47µ C305
L302 8.2µh
7915 U302
15µ C302
47µ C3
7905 U305
J303
J304
C316 .1µ
CR303
C303 9000µ 25V
L303 8.2µh
7805 U303
100µ C314
.47µ C306
15µ C309
1µ C323
K301 CONTACT
BD. ASS'Y., POWER SUPPLY 893619
WILLS 3/80
SCHEMATIC
Gould Inc Instruments Division Cleveland Ohio 44114 U.S.A.
CODE IDENT 96795
DWG NO. 293619

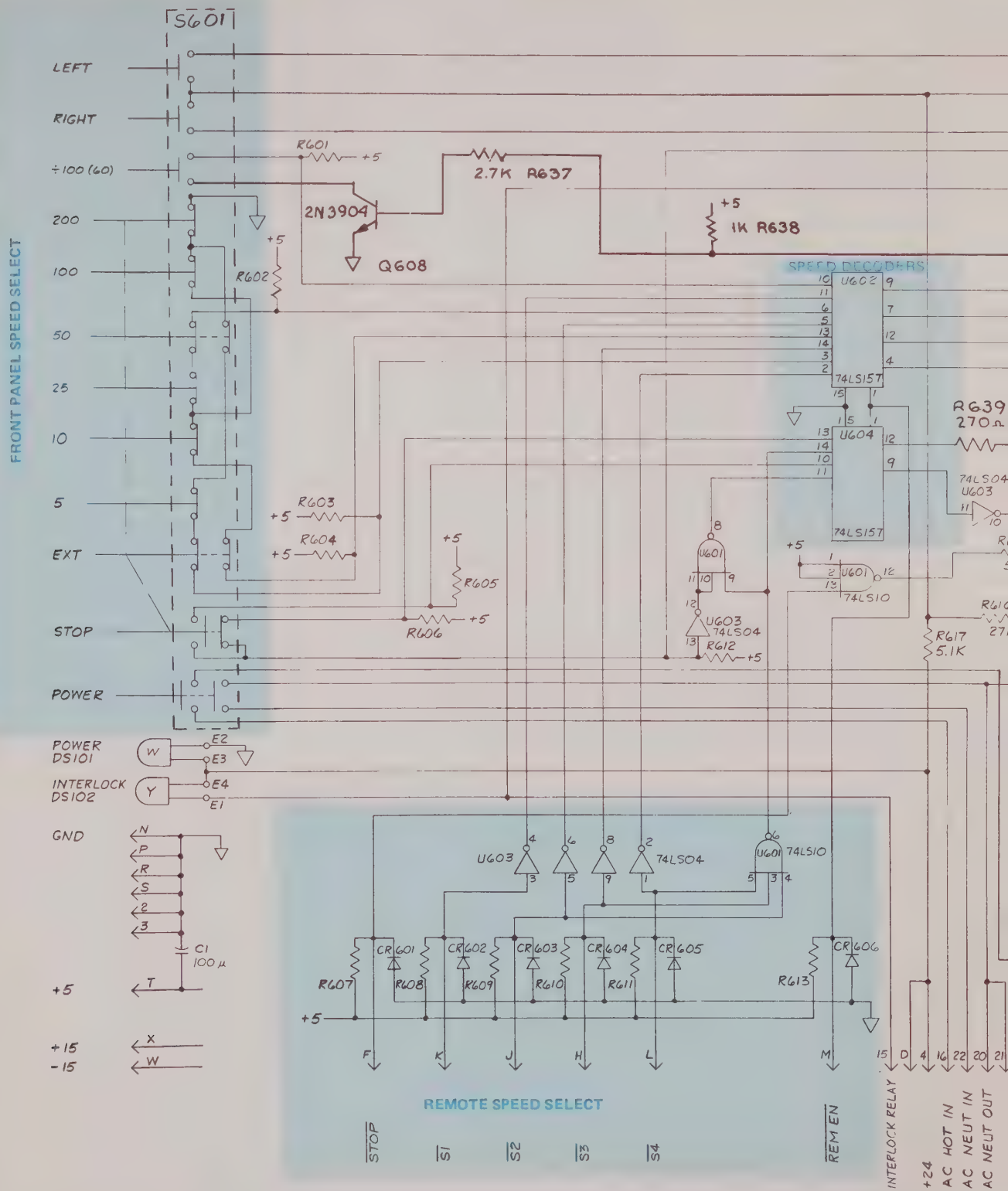


NOTES: UNLESS OTHERWISE SPECIFIED

1. ALL RESISTORS ARE 1KΩ, ¼W, 5%.
2. ALL DOIDES ARE IN4148.
3. ALL TRANSISTORS ARE 2N3904.

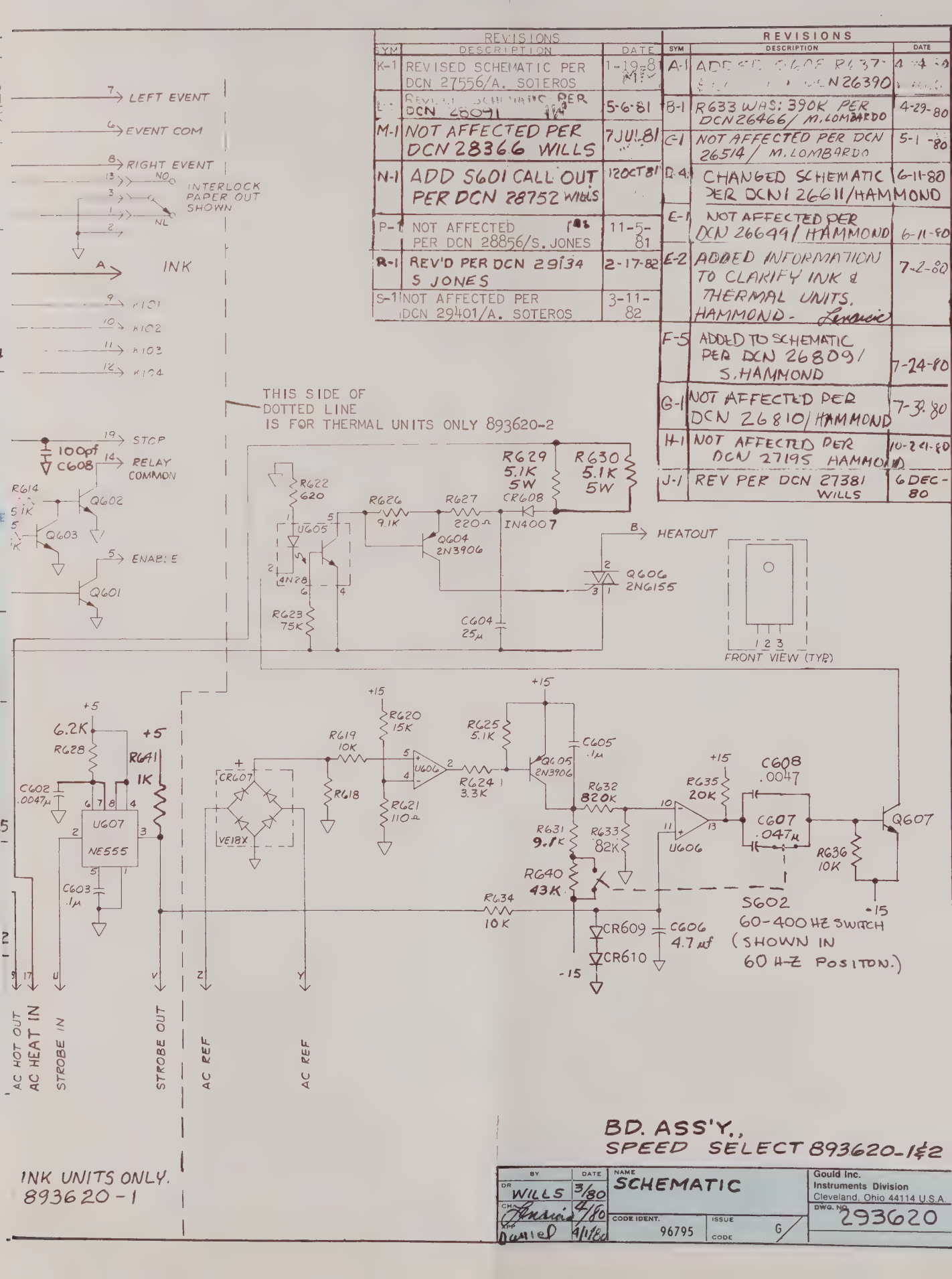
REVISIONS
SYM | DESCRIPTION | DATE
K-1 | REVISED SCHEMATIC PER DCN 27556/A. SOTEROS | 1-19-81
L-1 | REVISED SCHEMATIC PER DCN 28091 | 5-6-81
M-1 | NOT AFFECTED PER DCN 28366 WILLS | 7JUL81
N-1 | ADD S601 CALL OUT PER DCN 28752 WILLS | 12OCT81
P-1 | NOT AFFECTED PER DCN 28856/S. JONES | 11-5-81
R-1 | REV'D PER DCN 29134 S JONES | 2-17-82
S-1 | NOT AFFECTED PER DCN 29401/A. SOTEROS | 3-11-82
REVISIONS
SYM | DESCRIPTION | DATE
A-1 | ADDED CR609 R637 PER DCN 26390 | 4-4-80
B-1 | R633 WAS: 390K PER DCN 26466/ M. LOMBARDO | 4-29-80
C-1 | NOT AFFECTED PER DCN 26514/ M. LOMBARDO | 5-1-80
D-1 | CHANGED SCHEMATIC PER DCN 26611/HAMMOND | 6-11-80
E-1 | NOT AFFECTED PER DCN 26649/ HAMMOND | 6-11-80
E-2 | ADDED INFORMATION TO CLARIFY INK & THERMAL UNITS. HAMMOND - Lenucic | 7-2-80
F-5 | ADDED TO SCHEMATIC PER DCN 26809/ S. HAMMOND | 7-24-80
G-1 | NOT AFFECTED PER DCN 26810/ HAMMOND | 7-31-80
H-1 | NOT AFFECTED PER DCN 27195 HAMMOND | 10-21-80
J-1 | REV PER DCN 27381 WILLS | 6 DEC-80
7 LEFT EVENT
6 EVENT COM
8 RIGHT EVENT
13 NO
3
1 NC
2
INTERLOCK PAPER OUT SHOWN
A INK
9 K101
10 K102
11 K103
12 K104
THIS SIDE OF DOTTED LINE IS FOR THERMAL UNITS ONLY 893620-2
19 STOP
100pf C608
14 RELAY COMMON
R614 5.1K
Q602
Q603
5 ENABLE
Q601
R622 620
U605
4N28
R623 75K
R626 9.1K
R627 220Ω
Q604 2N3906
R629 5.1K 5W
R630 5.1K 5W
CR608 IN4007
B HEATOUT
Q606 2N6155
C604 25µ
1 2 3
FRONT VIEW (TYP)
+5
6.2K R628
+5 R641 1K
C602 .0047µ
U607 NE555
C603 .1µ
+15
R620 15K
R619 10K
R618
R621 110Ω
U606
R624 3.3K
R625 5.1K
Q605 2N3906
C605 .1µ
R632 820K
R631 9.1K
R633 82K
R640 43K
R634 10K
CR607 VE18X
CR609
CR610
C606 4.7 µf
-15
+15
R635 20K
C608 .0047
C607 .047µ
U606
R636 10K
Q607
S602 60-400 HZ SWITCH (SHOWN IN 60 H-Z POSITON.)
AC HOT OUT
AC HEAT IN
STROBE IN
STROBE OUT
AC REF
AC REF
INK UNITS ONLY. 893620-1
BD. ASS'Y., SPEED SELECT 893620-1&2
BY | DATE
DR WILLS 3/80
CH Lenucic 4/80
APP Daniels 4/18/80
NAME SCHEMATIC
CODE IDENT. 96795
ISSUE CODE G
Gould Inc. Instruments Division Cleveland, Ohio 44114 U.S.A.
DWG. NO. 293620

| REVISIONS | | |
|---|---|---|
| | DESCRIPTION | DATE |
| A-1 | NOT AFFECTED PER DCN 26447/A. SOTEROS | 5-23-80 |
| B-1 | NOT AFFECTED PER DCN 26908/S. HAMMOND | 8-26-80 |
| C-1 | CHANGED PIN NUMBERS PER DCN 26926 /S. HAMMOND | 9-23-80 |
| C-2 | NOT AFFECTED PER DCN 26925/S. HAMMOND | 9-23-80 |
| D1 | NOT AFFECTED PER DCN 29745 /S. JONES | 6-2-82 |
| E1 | NOT AFFECTED PER DCN 29762 /S. JONES | 6-25-82 |
| F-1 | ADDED J902 & D901 PER DCN 30577/A. SOTEROS | 5-10-84 |

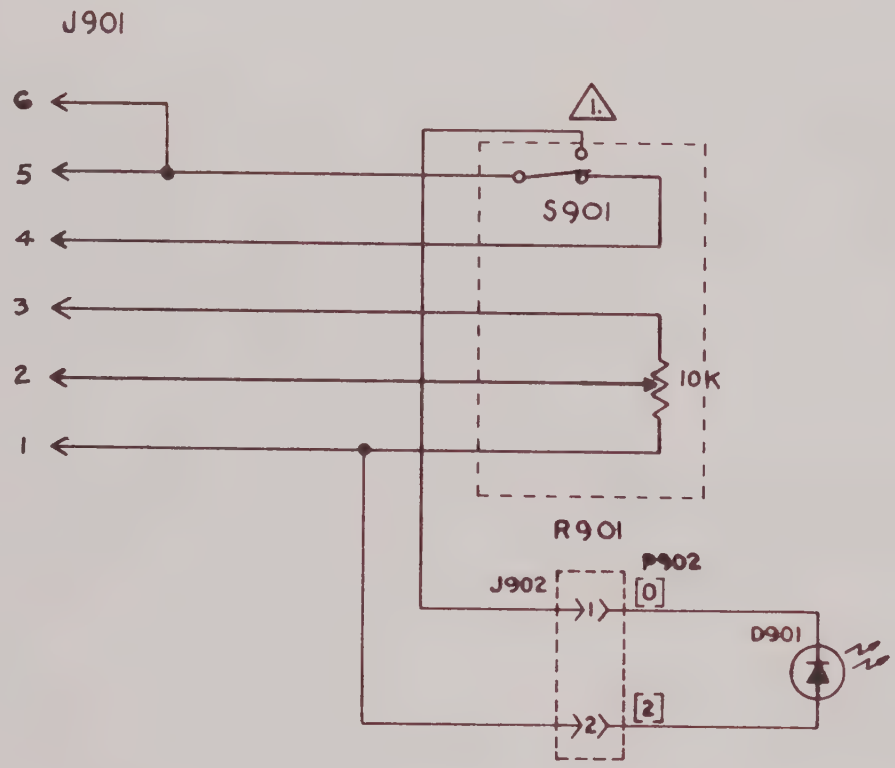


1. SWITCH SHOWN IN DETENT POSITION

NOTES:

BD. ASS'Y., VARIABLE SPEED 893G21

SCHEMATIC

893G21

REV. W-1

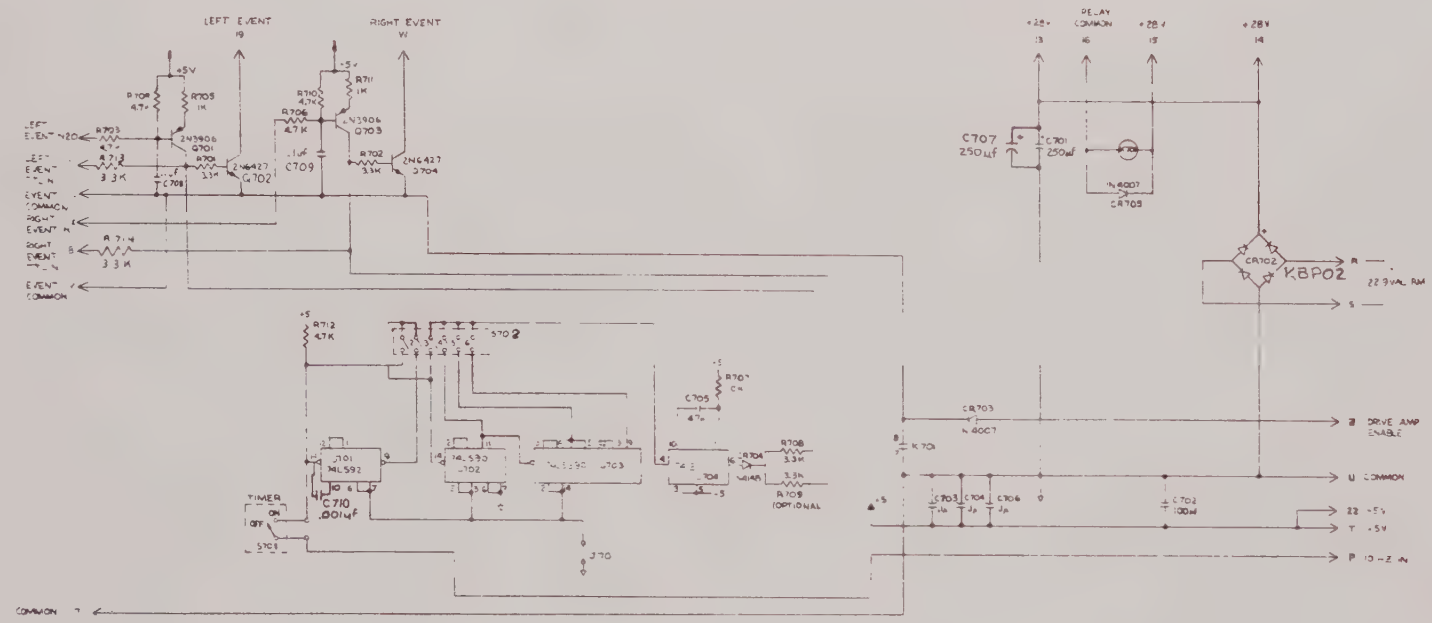


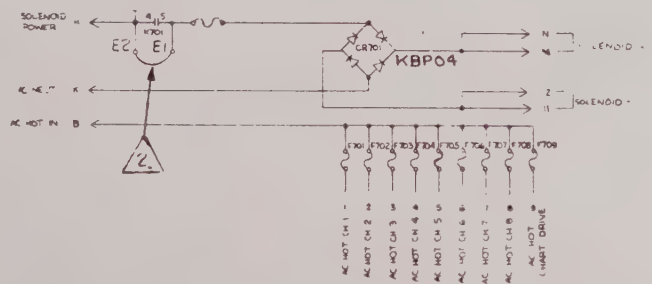


| S702 SETTINGS | | |
|---|---|---|
| REP RATE | SW ON | SW OFF |
| SEC | 1.3 | 2456 |
| 1 SEC | 1.4 | 2356 |
| 10 SEC | 1.5 | 2346 |
| 100 SEC | 1.6 | 2345 |
| .01 MIN | 2.3 | 1456 |
| .1 MIN | 2.4 | 1356 |
| 1 MIN | 2.5 | 1346 |
| 10 MIN | 2.6 | 1345 |

-00 = 115V
-01 = 100V
-06 = 100V
-07 = 200V

| RECORDER FUSE TABLE | | | | |
|---|---|---|---|---|
| | FOR-00 | FOR-01 | FOR-06 | FOR-07 |
| F701-F708 | 1 A 250V | 1/2A 250V | 1/2 A 250V | 1/2 A 250V |
| F709 | 1A 250V | 1/2A 250V | 3/4 A 250V | 1/2 A 250V |
| F711 W/2 INK SOLENOIDS | 1/4A 250V | 1/4A 250V | 1/4A 250V | 1/4A 250V |
| F711 W/1 INK SOLENOID | 1/8 A 250V | 1/8A 250V | 1/8A 250V | 1/8A 250V |
| F711 THERMAL 2 CHANNEL | 1/4A 250V | 1/4A 250V | 1/4A 250V | 1/4A 250V |
| F711 THERMAL 4 & 6 CHANNEL | 1/2A 250V | 1/2A 250V | 1/2A 250V | 1/2A 250V |
| F711 THERMAL 8 CHANNEL | 3/4A 250V | 3/4A 250V | 3/4A 250V | 3/4A 250V |

2 ADD JUMPER. FOR THERMAL USE ONLY
1. ALL RESISTORS ARE 1/4 W, ±5%

NOTES

| BY | DATE | NAME | |
|---|---|---|---|
| WILLS | 3/80 | SCHEMATIC | Gould Inc Instruments Division Cleveland, Ohio 44114 U.S.A. |
| CHECKED | | CODE IDENT 96795 | ISSUE CODE G |
| APPROVED | 4/4/80 | | DWG. NO. 294131 |

REV. H-1

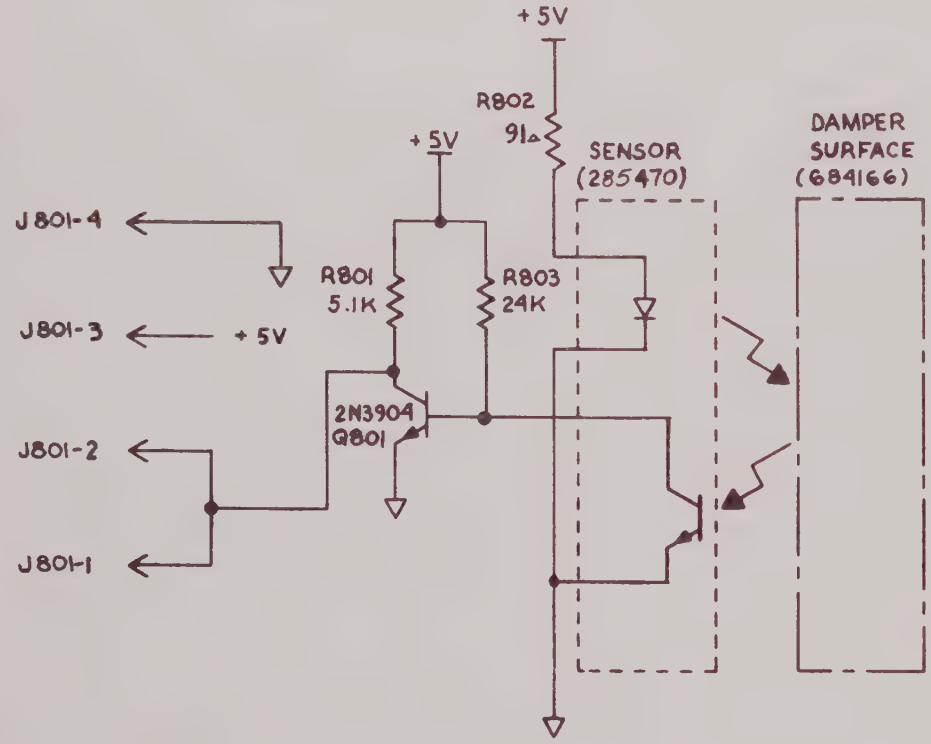


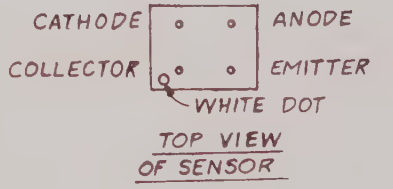


TOP VIEW
OF SENSOR

NOTES:

ALL RESISTORS ARE 1/4W, ± 5%

BD. ASS'Y.,
SENSOR 894133

SCHEMATIC

294133

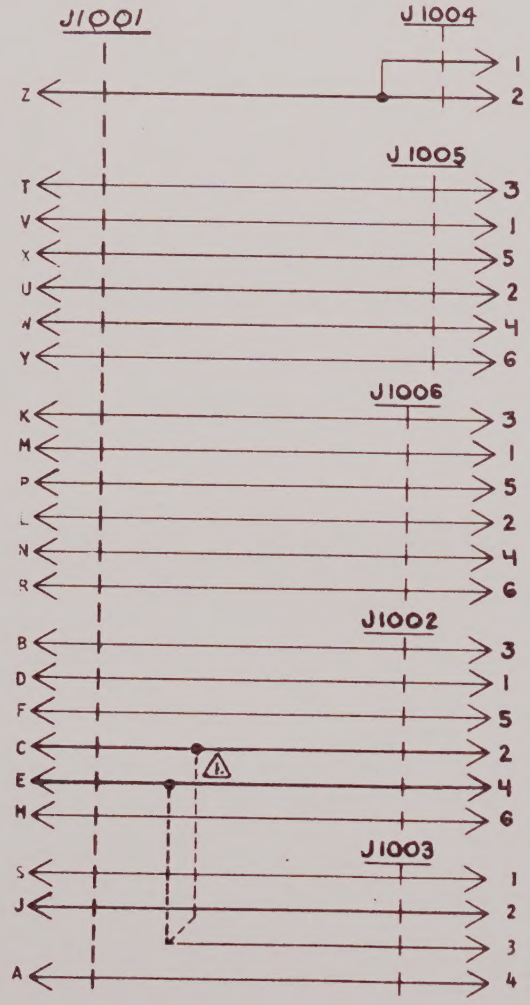


| REVISIONS | | |
|---|---|---|
| BY% | DESCRIPTION | DATE |
| A1 | CHANGED PICTORIAL PER DCN 26877, HAMMOND | 8MAR80 |
| B1 | NOT AFFECTED PER DCN 27365 J. DAVIS | 12-9-80 |
| C-1 | NOT AFFECTED PER DCN 27885 WILLS | 24MAR 81 |
| D-1 | NOT AFFECTED PER DCN 28660/4, SOTEROS | 9-24-81 |
| E-1 | NOT AFFECTED PER DCN 29467 WILLS | 3/23/82 |
| F-1 | REV PER DCN 29466 WILLS | 3/23/82 |
| G-1 | NOT AFFECTED PER DCN 29614 / S. JONES | 5-14-82 |
| H-1 | REVISED PICTORALLY ADDED NOTE 1 PER DCN 30093 / S. JONES | 11-12-82 |
| J-1 | CHANGED P1001 PIN DESIGNATIONS FROM NUMERALS TO ALPHABETICAL LETTERS | 9/7/83 |
| J-2 | CHANGED NOTE-1 PER DCN 30886 FOWLER | |

1. CONNECT PIN 3 ON J1003 TO PIN 4 OF J1002 FOR THE NONE SUFFIX AND CONNECT PIN 3 OF J1003 TO PIN 2 OF J1002 FOR THE -1 SUFFIX BOARD NUMBER 894286.

BD. ASS'Y. AC. DISTRIBUTION 894286

SCHEMATIC

94795 6

294286

www.manualsplus.com
1026210